Wynne City Council Meeting

Tuesday. May 13, 2025

Invocation

Pledge

Roll Call

Minutes from April 8, 2025

Department Head Reports:

- Jase Long – Parks & Recs
- Kyle Frymire – Public Works
- Richard Dennis – Police Chief
- Kory Ward – Fire Chief
- Blake Marotti – Wynne Water

New Business:

1. Parks Project
2. Ordinance 914 Allow city to do business with Diamond Ridge Carpentry
3. Ordinance 915 Finance new Residential garbage truck
4. Approve trade in of 2021 Garbage truck and pay balloon note on 2024 Garbage Truck
5. Update on Public Safety Equipment Grant
6. Approval to sell Rescue Box off 2005 Ford F-550
7. Ordinance 912 Alcoholic Beverages
8. Ordinance 913 Sales Tax on Alcoholic Beverages

MINUTES OF THE WYNNE CITY COUNCIL
April 8, 2025

The Wynne City Council met at Wynne City Hall on April 8, 2025, at 6:00 p.m. with Mayor JENNIFER HOBBS presiding. The roll was called, and the following councilpersons answered to their names: CHRIS DAVIS, BILLY FOWLER, RICKY MCDANIEL, STEVIE NELSON, LESTER MILLER, JOSHUA WYATT, BUCK MORRIS, LISA CARTER, JASON NICHOLS, and TYLER WAYMIRE; a quorum was declared. City Clerk, Emily Watts, was present. City Attorney, Kevin A. Watts, was present.

On the motion of Councilperson Morris and seconded by Councilperson Miller and by consent of all Members present, the minutes of a regular council meeting held on March 11, 2025 were approved, accepted, and filed as prepared by the City Clerk.

Richard Dennis, Wynne Police Department, Kyle Frymire, Public Works, Jase Long, Parks & Recreation, Kory Ward, Wynne Fire Department, Blake Marotti, Wynne Water, and Jennifer Hobbs, Mayor all provided monthly reports. On the motion of Councilperson Morris and seconded by Councilperson Nichols, and by consent of all members present, the department reports presented were approved and accepted.

For the First item of business, Mayor Hobbs declared Friday, April 11, 2025 as Blue & Green Day, for "Donate Life", organ donation.

For the Second item of business, Mayor Hobbs presented the Memorandum of Agreement between Cherry Valley and the City of Wynne that states that Cherry Valley shall pay $1,500 per month to the City of Wynne in return for Cherry Valley District Court cases being handled through the Cross County District Court and handled by the District Court Clerks currently in place. After further discussion, Councilperson Morris, with a second by Councilperson Davis, made a motion to approve the MOU and have Mayor Hobbs sign the agreement on behalf of the City of Wynne. By consent of all members present, the motion was passed.

For the Third item of business, Fire Chief Ward asked the Council approval to pay a past due invoice for Fire Department Viking IQ Turnout Gear to Central Alabama Training Solutions in the amount of $9,931.74. After further discussion, Councilperson Wyatt, with a second by Councilperson Morris, made a motion to approve the expenditure. With the consent of all members present, the motion was approved.

For the Fourth item of business, Mayor Hobbs nominated Connie Currie to be appointed to the Wynne Planning Commission. After further discussion, a motion by Councilperson Morris, second by Councilperson Davis, and consent of all members present, Connie Currie's nomination for appointment to the Wynne Planning Commission was accepted.

For the Fifth item of business, Mayor Hobbs presented and read in its entirety Ordinance 912 "AN ORDINANCE SETTING FORTH CERTAIN REGULATIONS FOR THE SALE OF ALCOHOL, BEER, AND WINE FOR ON-PREMISES CONSUMPTIONS IN THE CITY LIMITS OF WYNNE, ARKANSAS." After further discussion, Councilperson Morris, with a second from Councilperson Fowler, made a motion to move Ordinance 912 to a third reading at the May Council meeting where it can be voted on. The following vote carried the motion:

Carter – aye	Fowler – aye	Davis – aye	McDaniel – aye
Miller – aye	Morris – aye	Nelson – no	Nichols – aye
Waymire – aye	Wyatt – aye		

For the Sixth item of business, Mayor Hobbs presented and read in its entirety Ordinance 913 "AN ORDINANCE ESTABLISHING A SUPPLEMENTAL TAX ON ALCOHOLIC BEVERAGES AND FOR OTHER PURPOSES." After further discussion, Councilperson Morris, with a second from Councilperson Fowler, made a motion to move Ordinance 913 to a third reading at the May Council meeting where it can be voted on. The following vote carried the motion:

Carter – aye	Fowler – aye	Davis – aye	McDaniel – aye
Miller – aye	Morris – aye	Nelson – aye	Nichols – aye
Waymire – aye	Wyatt – aye		

For the Seventh item of business, Mayor Hobbs let the Council know that there may be discussions to pave Glenda Lane in the future.

With no further business before the council and upon motion by Councilperson Wyatt, second by Councilperson Miller, and consent of all, the meeting adjourned.

_____
Jennifer Hobbs, Mayor

ATTEST:

_____
Emily N. Watts, City Clerk

Parks & Recreation

City Council Report

May 2025

- Brought in $8,260.00 in RV Rentals in April.
- Brought in $1050.00 in Multipurpose Rentals in April.
- 299 Gallons of gas & 30 Gallons of diesel were used in April.
- Brought in $20,848.96 in concessions in April.
- Boys Tournament is 5/16 – 5/17.

DEPARTMENT OF PUBLIC WORKS MONTHLY REPORT FOR APRIL 2025

COLLECTED $1160.85 FOR CLASS 3 HAULED TO CITY SHOP

COLLECTED $7154.00 FOR ROLLOFFS (RENTAL, HAULING, DISPOSAL)

THE PUBLIC WORKS DEPT. USED 496 GALLONS OF GAS AND 3,251 GALLONS OF DIESEL.

PICKED UP 60 CUBIC YARDS OF LEAVES

HAULED 519.69 TONS OF CLASS I AND 318.02 TONS OF CLASS 3 TO THE WEST MEMPHIS LANDFILL, TOTAL COST $34,933.92

Wynne Police Department
Report to the City Council
Apr-25

Arrest:

Citations	195
Warnings	308
Felony	29

Accidents:

	25

Warrants:

Issued	97
Served	61

Receipts:

Act 1188 - City Ordinances	$	1,525.00
Act 988 - No Insurance Fines	$	724.75
Fines Collected by Municipal Court	$	9,126.62
Privilege License	$	900.00
Accident and Incident Reports	$	161.00
Total Receipts:	**$**	**12,437.37**

Milage:

Unit 1	2021 Dodge Charger	Miles On OD	33517
Unit 2	2021 Dodge Charger	Miles On OD	31923
Unit 3	2019 Dodge Charger	Miles On OD	NA
Unit 4	2019 Dodge Charger	Miles On OD	42966
Unit 5	2019 Dodge Charger	Miles On OD	77691
Unit 6	2021 Dodge Charger	Miles On OD	33620
Unit 7	2020 Dodge Durango	Miles On OD	47061
Unit 8	2021 Dodge Charger	Miles On OD	23721
Unit 9	2020 Dodge Durango	Miles On OD	38436
Unit 10	2019 Dodge Charger	Miles On OD	NA
Unit 11	2018 Dodge Charger	Miles On OD	48488
Unit 14	2025 Dodge Ram	Miles On OD	1102
Unit 15			
Unit 16	2021 Dodge Charger	Miles On OD	42523
Unit 17	2025 Dodge Durango	Miles On OD	1439
Unit 18	2025 Dodge Durango	Miles On OD	2017
Unit 19	2018 Dodge Charger	Miles On OD	54373
Unit 20	2018 Dodge Charger	Miles On OD	NA
Unit 21	2018 Ford Fusion	Miles On OD	NA
Unit 22	2023 Dodge Charger	Miles On OD	12415
Unit 23	2021 Grey Dodge Pickup	Miles On OD	32871
Unit 24	2021 Maroon Dodge Pickup	Miles On OD	NA
Unit 25	2023 Dodge Charger	Miles On OD	12534
Unit 26	2023 Dodge Charger	Miles On OD	24295
Unit 27	2023 Dodge Charger	Miles On OD	19992
Unit 28	2024 Dodge Durango	Miles On OD	10000
Unit 29	2024 Dodge Durango	Miles On OD	19543
Unit 30	2024 Dodge Durango	Miles On OD	14336
Unit 31	2012 Chevy Silverado	Miles On OD	148908

Gasoline Usage:

Used by the Police Department	1,807.60

PURCHASE ORDERS **2025** **April**

PO # / Invoice if Available	DATE	MERCHANT	SERVICE	UNIT #	DEPT CODE	AMOUNT
Beginning Balance					**Uniforms**	**$ 19,269.68**
					15	
Ending Balance						**$ 19,269.68**
Beginning Balance					**Office Supplies**	**$ 15,772.76**
44225-4226965804	4/10/2025	Cintas	Mat Services		17	$ (140.11)
44225-4228451305	4/24/2025	Cintas	Mat Services		17	$ (79.96)
44228	4/17/2025	USPS(Visa)	4 Rolls and 1 Book of Stamps		17	$ (306.60)
44228	4/29/2025	USPS(Visa)	1 roll of Stamps		17	$ (73.00)
44230	4/21/2025	Wal-Mart	Coffee, filters, cups, and Forks		17	$ (29.13)
44236	4/28/2025	Star Printing	File Boxes		17	$ (240.89)
Ending Balance						**$ 14,903.07**
Beginning Balance					**Equip Repair**	**$ 20,594.25**
44218-23228	4/2/2025	A.J.'s Automotive	Front Brakes and Labor	29	31	$ (222.22)
44218-23190	4/1/2025	A.J.'s Automotive	Air Filter	19	31	$ (30.20)
44218-23249-26	4/16/2025	A.J.'s Automotive	Tire repair and plug	26	31	$ (35.36)
44218-23278	4/22/2025	A.J.'s Automotive	Tire repair and plug	29	31	$ (47.20)
44218-23279	4/22/2025	A.J.'s Automotive	Waterpump,Thermostat, Antifreeze, and Drive Pulley	5	31	$ (487.64)
44219-1374-384616	4/4/2025	O'Reilly Autoparts	Wiper Blades	9	31	$ (67.60)
44219-1374-386659	4/19/2025	O'Reilly Autoparts	Wiper Fluid and Antifreeze	6	31	$ (25.39)
44219-1374-386644	4/19/2025	O'Reilly Autoparts	Capsule	6	31	$ (9.32)
44224-8166	4/4/2025	David's Body Shop	Frt BumperAssy& Cover, Hood panel, and Paint (21 Dodge Charger)		31	$ (2,832.38)
Ending Balance						**$ 16,836.94**
Beginning Balance					**Radio Maintenance**	**$ 2,500.00**
					34	
Ending Balance						**$ 2,500.00**
						$ 20,546.05
Beginning Balance					**Minor Equipment**	
44220-723	4/1/2025	Family Lifeworks	Book Program		35	$ (316.23)
44226-23725	4/5/2025	Brad Williams, Ph.D	Psych eval		35	$ (125.00)
44227	4/11/2025	Tractor Supply	50lb dog food (Levi K-9)		35	$ (103.86)
44237-283949	4/28/2025	Cross County Vet	Heartworm test and Pro-heart (Levi)		35	$ (125.00)
44229-43831	4/9/2025	John Wright Associates, Inc (Visa)	Havis Lug Kit UT-1003-KIT		35	$ (67.60)
	4/11/2025	PackTrack (VISA)	Yearly Handler Subscription (Levi)		35	$ (140.00)
Ending Balance						**$ 19,668.36**
Beginning Balance					**Capital Outlay**	**$ 640.27**
44231	3/27/2025	State of Arkansas Dept. Finance & Admin.(VISA)	2025 Dodge Ram Registration	14	36	**$ (11.18)**
44232-0138	4/22/2025	Supertints	Tint for 2025 Dodge Ram	14	36	**$ (217.00)**
Ending Balance						**$ 412.09**
Beginning Balance					**Gas & Oil**	**$ 79,138.99**
44217-23185	4/1/2025	A.J.'s Automotive	Oil Change	102	51	$ (113.62)
44217-23196	4/2/2025	A.J.'s Automotive	Oil Change	29	51	$ (83.42)
44217-23211-8	4/7/2025	A.J.'s Automotive	Oil Change	8	51	$ (83.42)
44217-23237-9	4/15/2025	A.J.'s Automotive	Oil Change	9	51	$ (83.42)
44217-23249-26	4/16/2025	A.J.'s Automotive	Oil Change	26	51	$ (83.42)
Ending Balance						**$ 78,691.69**
Beginning Balance					**Tires/Tubes**	**$ 3,865.60**
					60	
Ending Balance						**$ 3,865.60**
Beginning Balance					**Travel/Training**	**$ 5,600.00**
Ending Balance						**$ 5,600.00**

ANIMAL CONTROL EXPENSE LOG

SUPPLIES				PHARMACEUTICALS / VETERINARIAN		
Merchant		Date	Amount	Merchant	Date	Amount
Tractor Supply	50lb Mini Chunk x2, 15lb PuppyChow, Dog Biscuits x2, Mouse Glue Boards	1/13/2025	$ 87.42	Gehring Veterinary Hospital(348624)	2/3/2025	$ 117.00
Tractor Supply	50lb Mini Chunk x2, Biscuits x2, Quad Dewormer	1/27/2025	$ 91.42	Gehring Veterinary Hospital(349340)	2/11/2025	$ 30.00
O'Reilly Auto Parts	5qt Motor Oil	2/18/2025	$ 27.61	Gehring Veterinary Hospital(350084)	3/12/25 and 3/14/25	$ 85.00
Tractor Supply	2 x 50lb Mini Chunk, 2 x Biscuits, 2 x BF Knuckle, Ret 5 County 8-10in RLS BF, Quad Dewormer 4 count	2/10/2025	$ 110.30	Gehring Veterinary Hospital(350333)	3/22/2025	$ 135.71
Tractor Supply	4lb dog biscuits, 3 x Bleach, 2 x 50lb Mini Chunk	2/24/2025	$ 75.48	Gehring Veterinary Hospita(351171)	4/22/2025	$ 30.00
Martin Industrial/Pettus	Case of Bleach	2/27/2025	$ 33.18			
Star Printing	Toner 244 and 245	3/13/2025	$ 63.53			
Tractor Supply	2x 50lb dog food, foldaway scooper, 4lb dog biscuits, 5lb dog biscuits	3/18/2025	$ 93.43			
O'Reilly Auto Parts	5qt Motor Oil	3/19/2025	$ 27.61			
Tractor Supply	44lb dog food, 5lb dog biscuits, gloves	4/22/2025	$ 44.73			
AJ's Automotive	Oil Change and Air Filter	4/30/2025	$ 103.81			

Monthly Drug Report

Date of Arrest	Officer	Meth	Heroin	Marijuana	Cocaine	Fentanyl	Other	Charge	Arrests
4/3/2025	Ponder	1.2g						Felony	1
4/4/2025	Pierce	39.60g						Felony	2
4/4/2025	Richardson	4.20g		6.9g			3 meth pills, 1 schedule 2 pill	Felony	0
4/4/2025	Pierce			65g				Misd	1
4/4/2025	Burgess	24.20g		10.3g				Felony	3
4/8/2025	Burgess			10.4g			40g	Misd	0
4/9/2025	Pierce			4.98g				Misd	1
4/11/2025	Burgess	.010g						Felony	1
4/14/2025	Hendrix			2.87g				Misd	3
4/17/2025	Evans	4.96g						Felony	0
4/17/2025	Richardson				2.4g			Felony	2
4/17/2025	Richardson	6.65g						Felony	1
4/18/2025	Richardson	.030g						Felony	1
4/20/2025	Pierce	.46g						Felony	1
4/21/2025	Hendrix			.510g				Misd	1
4/23/2025	Evans			10.88g				Misd	1
4/24/2025	Hess	.250g						Felony	1
4/25/2025	Hess			286.33g			15.5oz	Felony	1
4/26/2025	Hendrix			.800g				Misd	1
4/27/2025	Hess	.50g						Felony	1
4/28/2025	Hess			.900g				Misd	1
4/29/2025	Hendrix						.140g	Misd	1
Monthly Total		**82.06g**		**399.87g**			**40.14g/15.5oz/4pills**		**25**

Fire - Incident Types with Monthly Breakdown

Date: Monday, May 5, 2025
Time: 11:49:27 AM

Alarm Date between 2025-04-01 and 2025-04-30

Incident Type Group	Incident Type Group	Details
100 - Fire	8	8 Rows
300 - EMS	39	39 Rows
400 - HAZMAT	2	2 Rows
500 - Service Call	2	2 Rows
600 - Series	2	2 Rows
700 - False Alarm	3	3 Rows
800 - Natural Disaster	3	3 Rows

Incident Type Group	2025-04-01	Total
100 - Fire	8	8
500 - Service Call	2	2
700 - False Alarm	3	3
800 - Natural Disaster	3	3
600 - Series	2	2
400 - HAZMAT	2	2
300 - EMS	39	39
Monthly Total	59	59

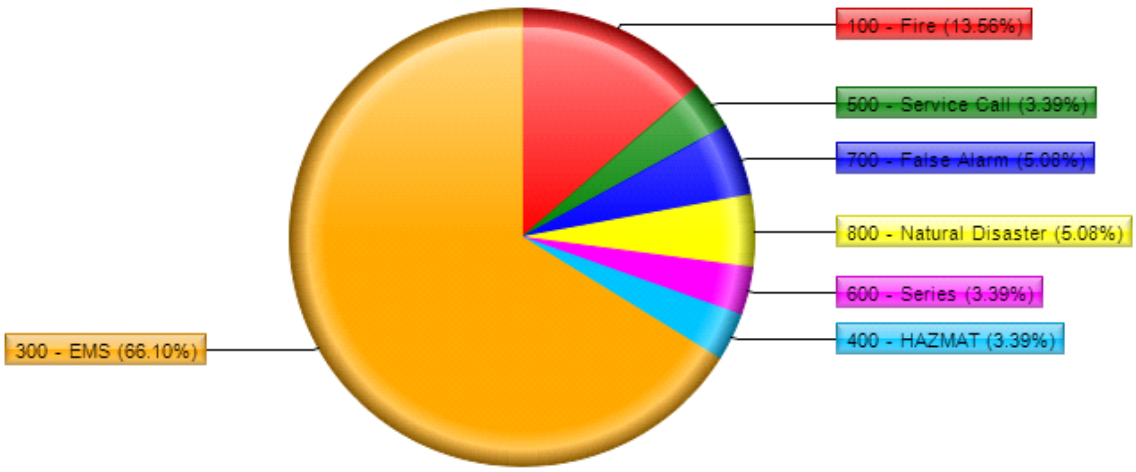

Building Inspector Monthly Report

April 2025

Residential Single Family	2
Residential Multi-Family	x
Residential Addition	x
Residential Alterations	X
Residential Sprinkler	x
Manufactured Homes	X
Commercial Building	3
Commercial Alterations	x
Commercial Sprinkler	x
Commercial Sign Permits	x
Commercial Electrical	1
Commercial Plumbing	2
Commercial HVAC	X
Res Plumbing Permits	2
Res Electrical Permits	3
Res HVAC Permits	3
Res Gas piping	x
Re-Roofing Permits	3
Residential Acc Bldg	1
Fencing Permits	3
Deck Permits	x
Swimming Pool Permits	x
Storm Shelter Permits	x
Demolition Permits	x
Mobile Vending Permits	x
Communication/Cell Tower	x
Temp Tent/Trailer/Structures	x

Total Permits Issues (23)

April Inspections Done 2025

Electrical	Foundation
Plumbing	Framing
HVAC	Address
Gas	Final Inspections
Fire Inspection	Mis
Public Service	Contractor Lic
Total Inspections	**31**

Total Receipts for April 2025 …….. **$ 76,785.60**

ALL PURCHASE ORDERS, CONTRACTS, AND CHECKS TO BE MADE OUT TO:
ACS Playground Adventures
8501 Mantle Ave.
Oklahoma City, OK 73132
PH: 405-721-3506
Fax: 405-721-3514

Quote

May 6, 2025
DATE

CONTACT: City of Wynne
ORGANIZATION
EMAIL:
PHONE:
FAX:

SHIP TO:

BILL TO: **Invoice will be emailed to email address above unless another email address or mailing address is provided**

Destination
F.O.B.
FREIGHT ☐ Prepaid ☐ Collect

50% down/Net 15 after install
TERMS (Subject To Credit Approval By ACS)

SHIPPING TIME

Equipment Pricing Good for 30 days
All Other Pricing Good for 30 Days from Date of Proposal

Project Name:

QTY	ITEM NO.	DESCRIPTION	UNIT PRICE		EXTENDED AMT
1		Repainting of (1) Half Basketball Court and (1)		-	$ 22,477.00
		Full Basketball Court		-	$ -
		-(1) Coat of Resurfacer Sport		-	$ -
		-(2) Coats of Sportcolor		-	$ -
		-Includes 2" Basketball Playing Lines		-	$ -
		-Patching of Cracks Wider than 1/16" Included		-	$ -
				-	$ -
1		87x52' Red Iron Shelter - 20' Center		-	$ 66,210.00
		-IBC 2021		-	$ -
		-Wind Exp (B)		-	$ -
		-No Cables at Ground Level		-	$ -
1		Engineering for 87'x52' Shelter		-	$ 4,959.00
				-	$ -
4		6' Benches - Direct Bury - with Back	825.00		$ 3,300.00
				-	$ -
1		Possible price increase		-	$ 8,200.00
		*ACS will only bill this if the manufacturer		-	$ -
		charges us*		-	$ -
				-	$ -
				-	$ -

Quote/Order Conditions on Pg2

SIGNATURE BELOW ACCEPTING THIS PROPOSAL WILL CONSTITUTE A PURCHASE ORDER ONLY UPON APPROVAL BY ACS PLAYGROUND ADV.

ALL ORDERS ARE TAXABLE UNLESS A SALES TAX EXEMPTION IS PROVIDED. AGENT LETTER MUST ALSO BE PROVIDED WITH ACS PLAYGROUND ADVENTURES AS AUTHORIZED USER OF THE SALES TAX EXEMPTION. IF NO AGENT LETTER IS PROVIDED SALES TAX FOR MATERIALS MAY BE CHARGED BACK TO THE CUSTOMER.

ORDER ACCEPTANCE IS BASED ON SIGNED PRE-CONSTRUCTION FORM BY CUSTOMER

ACCEPTED BY CUSTOMER DATE

PRINT NAME

PROPOSED BY ACS REPRESENTATIVE DATE

PRINT NAME

SUBTOTAL MATERIAL		$ 105,146.00
INSTALLATION		$ 55,000.00
FREIGHT		$ 5,000.00
Sales Tax Rate 10.500%	Taxable	$ 11,565.00
TOTAL		$ 176,711.00

Project Scope Summary	Alternates

Pricing Includes		
Yes	**No**	
☑	☐	Onecall Locate
☐	☑	Private Locate - any and all provate lines, includes geo-thermal
☑	☐	Survey, benchmarks, finished grade by Owner/GC/others
☑	☐	Engineered site specific stamped drawings - Shade structures
☐	☑	Permits by ACS
☐	☑	Site prep/excavation to grade
☐	☑	Haul off of spoils (excludes trash)
☑	☐	Sales Tax
☑	☐	Pricing based on all scopes included on quote
☐	☑	Removal of fence required
☐	☑	Replace/repair fence that is taken down
☐	☑	Repair disturbed soil, sod, clean up ruts with top soil and sod
☐	☑	Protect existing concrete sidewalk or slab with plywood
☐	☑	Drainage under playground or tie into external drain
☐	☑	Davis Bacon wages/ Certified Payroll
☐	☑	Monthly progress payments
☐	☑	Deposit required
☑	☐	Invoice for materials once shipped
☑	☐	Product shipped to site
☐	☑	Product unloaded by GC/Owner
☐	☑	Dumpster provided by GC/Owner
☑	☐	Haul off of trash and debris (excludes excavation)
☐	☑	Repair unmarked sprinkler heads or lines if hit by ACS
☑	☐	Additional charges for additional labor and equipment due to rock or unknown conditions in the ground
☑	☐	Time is of the Essence for GC/AE/Owner submittal review/approval to avoid cost escalation of materials. Submittals returned by GC/Owner within 3 weeks.
☐	☑	Payment and performance bond.
☐	☐	
☐	☐	

Project Notes

Customer Acknowledgement

Authorized Signature

Date

Printed Name and Title

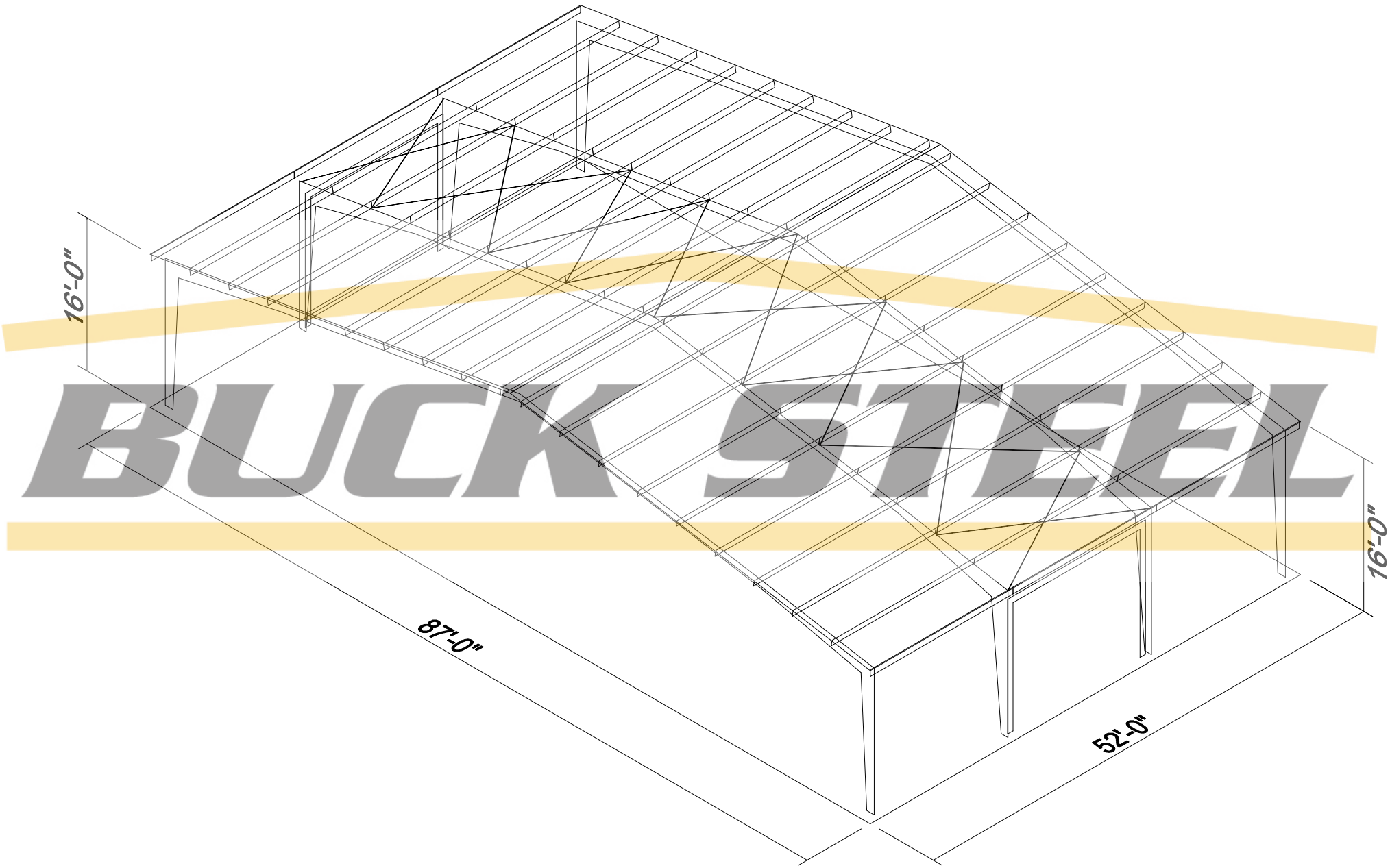

BUCK STEEL

NOT FOR CONSTRUCTION - PRELIMINARY - SUBJECT TO CHANGE

⊠ Dia= 3/4"

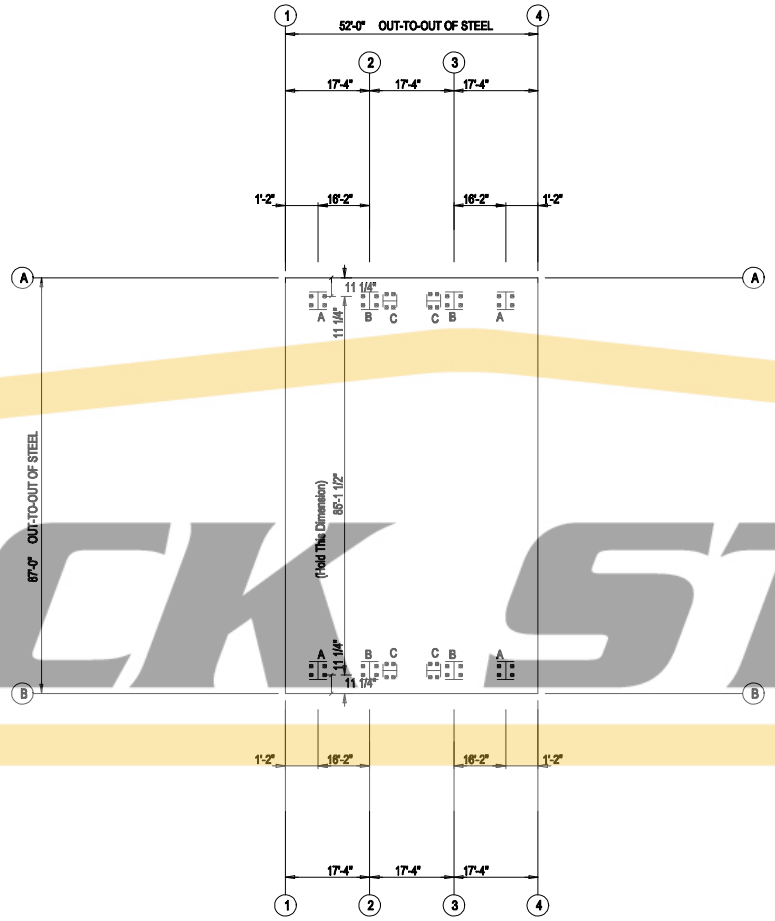

ANCHOR BOLT PLAN

NOTE: All Base Plates @ 100'-0" (U.N.)

BUCK STEEL

IMPORTANT!
Do Not Set Anchor Rods with these Preliminary Drawings.

The building manufacturer will not be responsible for the location of the anchor rods on the Preliminary Drawings.

The Engineer whose seal and signature appear on these documents represent Whirlwind Steel Buildings, Inc., and is not the Engineer of Record for the overall project. The Engineer's responsibility is limited to material designed and manufactured by Whirlwind Steel Buildings, Inc.

BUCK STEEL

REV	DATE	DESCRIPTION	BY	CHK

DESC: ANCHOR BOLT PLAN					BLDG. SIZE: 87'-0" x 52'-0" x 16'-0"	
CUSTOMER:					LOCATION:	
REFERENCE:						
JOBSITE:					COUNTY:	
DWN:	CHK:	DATE: 4/21/25	ENG:	JOB NO: BS72954	DWG NO:	ISSUE

NOT FOR CONSTRUCTION - PRELIMINARY - SUBJECT TO CHANGE

BOLT TIGHTENING (Pretensioned)

All bolted joints with ASTM F3125 Grade A325 bolts are specified as pretensioned joints in accordance with the Specification for Structural Joints Using High-Strength Bolts, June 11, 2020. The specification recognizes five pretensioning methods without preference to any one; (1) Turn-of-Nut, (2) Calibrated Wrench, (3) Twist-Off Tension Control, (4) Direct tension Indicator, and (5) Combined Method.

The metal building manufacturer recommends the use of Turn-of-Nut method as it requires no special bolts, washers, or installation tools. When standard size holes are used with Turn-of-Nut method, and the nut is the part rotated, no washers are required per Section 6.2 of the Specification. The requirements of the Specification, Section 7 shall be completed before joint assembly.

Excerpts from the Specification, Section 8.2.1:
After the Snug-Tight operation has been performed, the nut rotation as specified in Table 8.1 shall be applied to all bolts in the joint, progressing systematically from the most rigid part of the joint in a manner that will minimize relaxation of previously pretensioned bolts.

Installation inspection requirements for Pretensioned joints using Turn-of-Nut method can be found in Section 9.2.1 of the Specification.

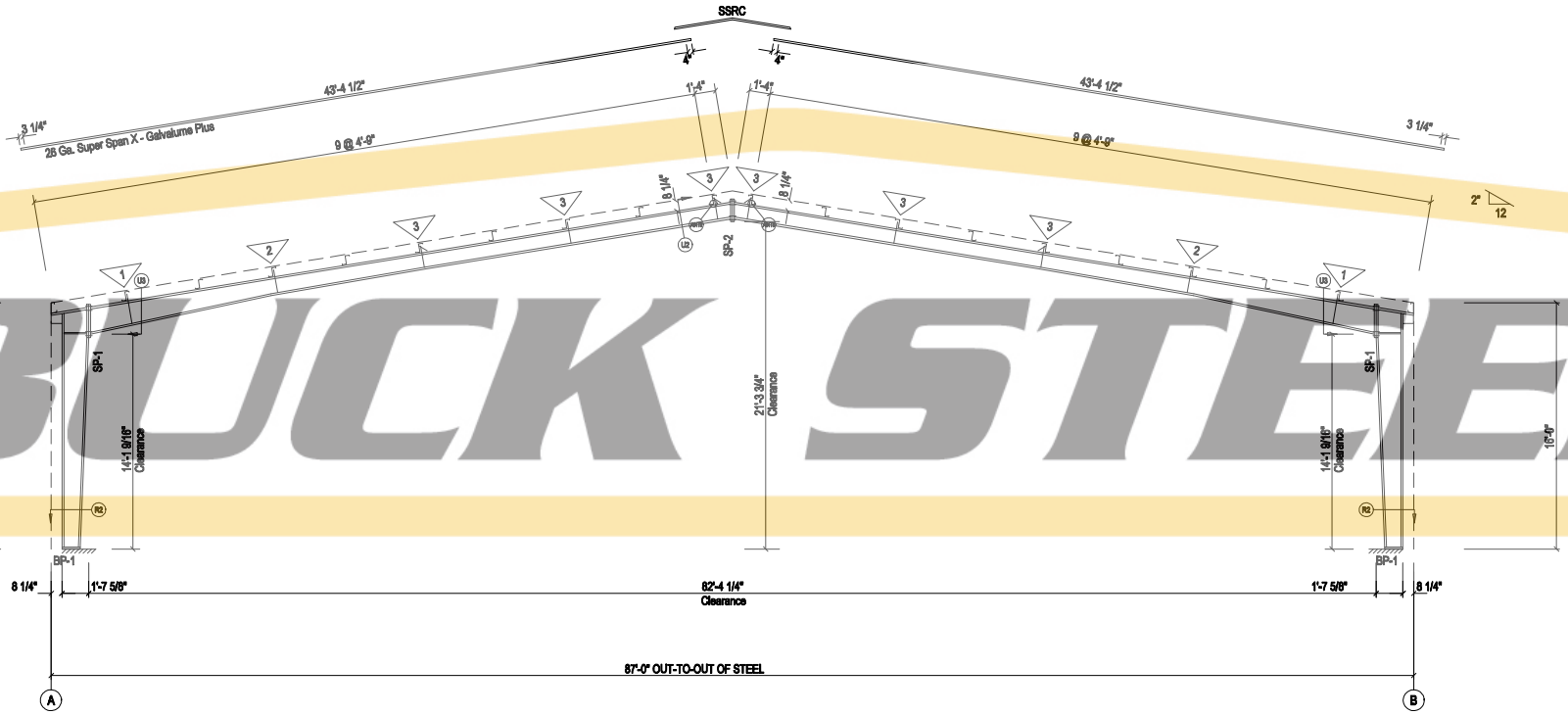

RIGID FRAME ELEVATION: FRAME LINE 1 4

BUCK STEEL

The Engineer whose seal and signature appear on these documents represent Whirlwind Steel Buildings, Inc., and is not the Engineer of Record for the overall project. The Engineer's responsibility is limited to material designed and manufactured by Whirlwind Steel Buildings, Inc.

REV	DATE	DESCRIPTION	BY	CHK

BUCK STEEL

DESC: RIGID FRAME ELEVATION					BLDG. SIZE: 87'-0" x 52'-0" x 16'-0"	
CUSTOMER:					LOCATION:	
REFERENCE:						
JOBSITE:					COUNTY:	
DWN:	CHK:	DATE: 4/21/25	ENG:	JOB NO: BS72954	DWG NO:	ISSUE

NOT FOR CONSTRUCTION - PRELIMINARY - SUBJECT TO CHANGE

BOLT TIGHTENING (Pretensioned)

All bolted joints with ASTM F3125 Grade A325 bolts are specified as pretensioned joints in accordance with the Specification for Structural Joints Using High-Strength Bolts, June 11, 2020. The specification recognizes five pretensioning methods without preference to any one; (1) Turn-of-Nut, (2) Calibrated Wrench, (3) Twist-Off Tension Control, (4) Direct tension Indicator, and (5) Combined Method.

The metal building manufacturer recommends the use of Turn-of-Nut method as it requires no special bolts, washers, or installation tools. When standard size holes are used with Turn-of-Nut method, and the nut is the part rotated, no washers are required per Section 6.2 of the Specification. The requirements of the Specification, Section 7 shall be completed before joint assembly.

Excerpts from the Specification, Section 8.2.1:
After the Snug-Tight operation has been performed, the nut rotation as specified in Table 8.1 shall be applied to all bolts in the joint, progressing systematically from the most rigid part of the joint in a manner that will minimize relaxation of previously pretensioned bolts.

Installation inspection requirements for Pretensioned joints using Turn-of-Nut method can be found in Section 9.2.1 of the Specification.

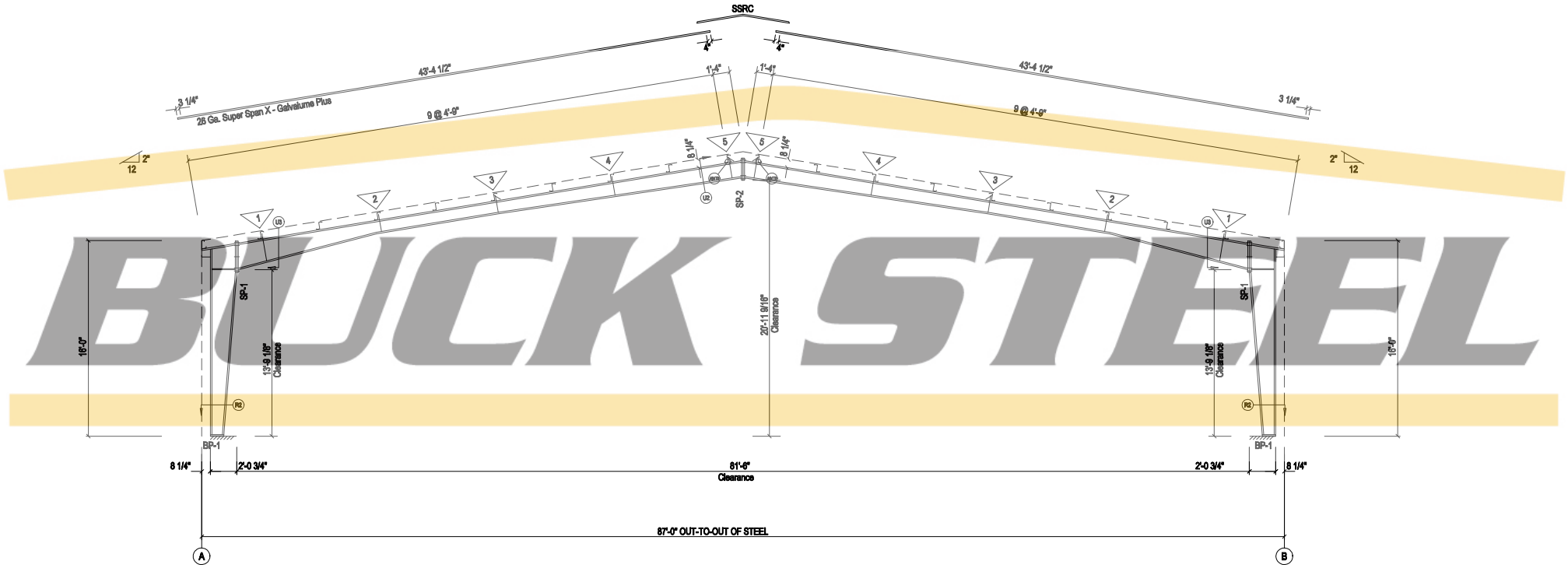

RIGID FRAME ELEVATION: FRAME LINE 2 3

BUCK STEEL

The Engineer whose seal and signature appear on these documents represent Whirlwind Steel Buildings, Inc., and is not the Engineer of Record for the overall project. The Engineer's responsibility is limited to material designed and manufactured by Whirlwind Steel Buildings, Inc.

REV	DATE	DESCRIPTION	BY	CHK

BUCK STEEL

DESC: RIGID FRAME ELEVATION	BLDG. SIZE: 87'-0" x 52'-0" x 16'-0"
CUSTOMER:	LOCATION:
REFERENCE:	
JOBSITE:	COUNTY:

DWN:	CHK:	DATE:	ENG:	JOB NO:	DWG NO:	ISSUE
		4/21/25		BS72954		

NOT FOR CONSTRUCTION - PRELIMINARY - SUBJECT TO CHANGE

Proposal

Page No. of Pages

~~Roberts Home Improvements, Inc~~
1804 Hwy 64B
Wynne, AR 72396
Arkansas Commercial Lic# 0221561014
Fed Tax ID 71-0808832
870-208-4440

PROPOSAL SUBMITTED TO City of Wynne		PHONE 870-	DATE 4-21-25
STREET Deshea Park		JOB NAME PARK	
CITY, STATE, AND ZIP CODE Wynne AR 72396		JOB LOCATION SAME	
ARCHITECT	DATE OF PLANS		JOB PHONE

We hereby submit specifications and estimates for:

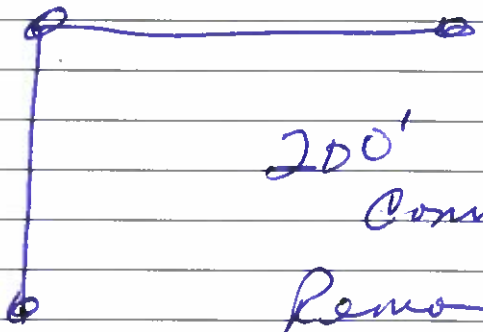

200' BLACK IRON Fence
Commercial GRADE

Remove CHAIN-LINK
INSTALL NEW Fence

We Propose hereby to furnish material and labor - complete in accordance with above specifications, for the sum of:

dollars ($ 24,174.00)

Payment to be made in full upon completion of work, unless otherwise noted

All material is guaranteed to be as specified. All work to be completed in a workmanlike manner according to standard practices. Any alteration or deviation from above specifications involving extra costs will be executed only upon written orders, and will become an extra charge over and above the estimate. All agreements contingent upon strikes, accidents or delays beyond our control. Owner to carry fire, tornado and other necessary insurance. Our workers are fully covered by Workmen's Compensation Insurance.

Authorized Signature Roland Roberts

Note: This proposal may be withdrawn by us if not accepted within _____ days.

Acceptance of Proposal - The above prices, specifications and conditions are satisfactory and are hereby accepted. You are authorized to do the work as specified. Payment will be made as outlined above.

Signature _____

Date of Acceptance: _____

Signature _____

Form STKR 65732

Diamond Ridge Carpentry LLC

Aaron Mears
33 CR 398
Wynne, AR
72396
8703621556
aaronmears@outlook.com

ESTIMATE
EST000217

DATE
05/06/2025

TOTAL
USD $16,330.00

TO

City Of Wynne

206 South Falls
Wynne, AR
72396
8705893715
jlong@cityofwynne.com

DESCRIPTION	RATE	QTY	AMOUNT
Submitting an Estimate for the purchasing and install of a commercial three rail fence that comes with pressed spear top aluminum and 1 gate. *185 feet of Onguard Longspur Commercial Aluminum Fence Panel 72H (6' in height) *2.5" post with cap *Onguard Longspur Commercial Gate 72H x 36W with self closing hinges * removal and discard of any debris or fencing in direct line of new install *post will be concreted in place * before digging 811 will be contacted to locate anything under the ground Details of Aluminum Arched Gate: Onguard Longspur Commercial aluminum gate fits a 37.5 inch opening between posts. Longspur commercial gates have pressed spear top pickets that provide security and the look of a wrought iron or steel fence. This gate matches 72 inch tall Longspur commercial aluminum fence panels. Onguard gates have a welded frame for strength and durability. The aluminum pickets slot down through pre-cut holes in the middle of the horizontal rails. Onguard commercial gates are powder coated for a maintenance free, rustproof finish between	$16,330.00	1	$16,330.00

shiny and matte. In addition, there is an option for a welded pet panel for the bottom of the gate. This pet panel is a great way to keep your pets safe while keeping other animals out.

Arched Gates and Double Gates

Arched gates are an option for Onguard commercial Longspur 6 foot tall gates. You can create double gates by ordering two of the same gates and noting which gates are double gates during checkout. Continuous arched gates form a single arch over the span of a double gate. Purchase a drop rod to keep one gate closed, and pull out the drop rod to open both gates.

Decorative Finials

You can use decorative finials instead of the standard pressed spears. You would need 7 decorative finials to replace the pressed spear tops on this gate. Onguard will cut the pressed spears off the fence panels to allow the installation of the decorative finials.

Powder coated
Aluminum gate
Pet panel option available
Welded frame
Self closing hinges included
Limited lifetime warranty

Details of Fence Materials:

Onguard Longspur commercial aluminum fence panel is 72 inches tall and comes in 72.5 inches or 96 inch widths. Longspur commercial is a three rail fence that comes with pressed spear top pickets, which provide security and the look of a wrought iron or steel fence. Onguard Commercial Longspur fence panels come in pre-assembled pre-cut heights and widths that you can trim down with a hacksaw or reciprocating saw. Commercial Longspur aluminum fence panels can support 500 lbs of pressure on the top rail. Onguard Commercial fence panels are powder coated, which will keep your fence looking great for many years, unlike having to paint an iron or steel fence. Powder coated stainless steel screws are visible on one side of the fence panel where each horizontal rail meets each vertical picket.

Aluminum Pool Fence

Onguard Longspur, at 72 inches tall, should make most local swimming pool fence codes. Most pool codes

require 45 inches between the two innermost horizontal rails. This fence style 60 inches tall or higher should make most pool codes. Check your local building codes for the requirements to make pool code in your area. Onguard horizontal rails have a beveled design that creates a decorative look while shedding water away and adding strength.

Commercial Grade Pet Fence

Onguard Longspur commercial fence panels at 72 inches tall can have a welded pet panel at the bottom of the fence panel. Pet panel picket spacing is 1 5/8 inches, which will keep pets safe in your yard and other animals out. Longspur fence will not make pool code with a pet panel.

Decorative Finials

You can use decorative finials instead of the standard pressed spears. Longspur 72 inch wide panels have 15 vertical pickets, so you will need 15 finials. Longspur 96 inch panels have 21 vertical pickets. Onguard will cut the pressed spears off the fence panels to allow installation of the decorative finials.

Rust and maintenance free
72 inches tall
Powder coated
Made overseas
Pre-assembled panels
Supports 500 lbs
Trim to size
Commercial grade
Pressed spear tops
Good for home and commercial applications

SUBTOTAL	**$16,330.00**
TAX (15.3%)	**$0.00**
TOTAL	**USD $16,330.00**



DATE SIGNED

05/06/2025

Before work can begin 50% of the total cost is to be collected in order for materials to be picked up. Once A job has cycled and completed is when payment will be due, all checks made out to Aaron Mears.

Thank You for Considering Diamond Ridge Carpentry to make your home shine.

CITY OF WYNNE

ORDINANCE NUMBER 914

AN ORDINANCE TO AUTHORIZE COUNCIL MEMBERS, OFFICIALS, OR MUNICIPAL EMPLOYEES OF THE CITY OF WYNNE TO CONTRACT WITH THE CITY OR ITS AGENCIES TO FURNISH SUPPLIES, EQUIPMENT, OR SERVICES TO THE MUNICIPALITY PURSUANT TO A.C.A. 14-42-107, AND DECLARING AN EMERGENCY.

WHEREAS, Arkansas Code § 14-42-107 provides that no council member, official, or municipal employee shall be interested, directly or indirectly, in the profits of any contract for furnishing supplies, equipment, or services to the municipality unless the governing body of the city has enacted an ordinance specifically permitting council members, officials, or municipal employees to conduct business with the city and prescribing the extent of its authority; and

WHEREAS, the City of Wynne from time to time needs supplies, equipment, or services, and some of those services are provided by council members, elected officials, and employees.

NOW, THEREFORE, BE IT ORDAINED BY THE CITY COUNCIL OF THE CITY OF WYNNE, ARKANSAS:

Section 1: Authorization. Pursuant to A.C.A. 14-42-107, the City of Wynne, through its City Council, specifically permits a City of Wynne official or employee to be interested, directly or indirectly, in the profits of any contract for the furnishing of any supplies, equipment, or services to the City of Wynne, provided that the official or employee are specifically named and their authorization stated in an ordinance.

Section 2: Pursuant to Section 1, Aaron Mears, Firefighter for the City of Wynne, by and through his company, Diamond Ridge Carpentry, LLC, is authorized to be interested, directly or indirectly, in the profits of any construction or repair services to the City of Wynne.

Section 3: All ordinances or parts of ordinances in conflict herewith are hereby repealed to the extent of the conflict.

Section 4: That the provisions of this ordinance are hereby declared to be severable and if any section, phrase, or provision shall be declared or held invalid, such invalidity shall not affect the remainder of the sections, phrases or provisions.

Section 5: Emergency Declared Therefore, an emergency is hereby declared to exist, and this Ordinance being necessary for the immediate preservation of the public health, peace, safety and welfare, shall take effect and be enforced immediately upon its passage and approval.

Passed and approved this 13th day of May 2025.

_____

Jennifer Hobbs, Mayor

ATTEST _____

Emily Watts, City Clerk

CITY OF WYNNE

ORDINANCE NUMBER 915

AN ORDINANCE WAIVING THE BID PROCESS AND LEASE THROUGH ARVEST BANK
ONE New 2025 Mack/Heil Side-arm Loader and DECLARING AN EMERGENCY

BE IT, THEREFORE, ORDAINED by the City Council of Wynne, Arkansas, that the City of Wynne lease one New 2025 Mack/Heil Side-arm Loader.

WHEREAS, River City Hydraulics, Sherwood, Arkansas, is a responsible for competitive vendor; and

WHEREAS, the City has reason to believe that this company is a responsible and competitive vendor; and

WHEREAS, currently no other vendors are offering this arrangement.

NOW, THEREFORE, an emergency is declared to exist and the taking of competitive bids is hereby waived and the Mayor is authorized and directed to contract with River City Hydraulics, Sherwood, Arkansas for the lease of one New Mack/Heil Side-arm Loader as specified in this attached proposal.

PASSED AND APPROVED on this 13th day of May 2025.

_____
Jennifer Hobbs, Mayor

_____
Emily Watts, City Clerk

River City Hydraulics, Inc.
PO Box 6033
Sherwood, AR 72124
Phone: (501) 835-5230
Fax: (501) 834-1233

Purchase Agreement

Date	Estimate #
9/23/2024	22423

Name / Address	Ship To
City of Wynne Public Works 1878 HWY 64 Spur Wynne, AR 72396	City of Wynne Public Works 1878 HWY 64 Spur Wynne, AR 72396

PRICE IS VALID FOR 5 BUSINESS DAYS

P.O. No.	Terms	Rep	Unit Number	Serial Number	VIN
	Due on receipt	DS			

Item	Description	Qty	U/M	Rate	Total
HEIL DURAPA...	Heil 28 yard DuraPack Python Automated Collection Body mounted on a New and Unused Mack LR Dual Drive Chassis	1	ea	427,600.88	427,600.88
SOURCEWELL...		1		-8,811.80	-8,811.80T
Options	Options Included Below at no additional charge			0.00	0.00T
Options	Full Factory Mount			0.00	0.00T
Options	TriCuff Grabber 30-110 gallon			0.00	0.00T
Options	Operate-in-gear-at-idle (OIGAI) Front Mount Tandem Vane Pump			0.00	0.00T
Options	Hopper and Lift Work Lights LED			0.00	0.00T
Options	Integrated Grabber Work Light Kit mounted on the side of the hopper			0.00	0.00T
Options	Multi Function LED Strobe Lights			0.00	0.00T
Options	Body Back Assist Flood Lights LED			0.00	0.00T
Options	Base 3rd Eye® Single Camera System with 7" STD. monitor and Single Camera Mounted on Tailgate			0.00	0.00T
Options	Add on 3rd Eye® Camera (Hopper)			0.00	0.00T
Options	Add on 3rd Eye® Camera (Grabber) (Mounted Hopper Side)			0.00	0.00T
Options	Mud Flaps ahead of rear tires			0.00	0.00T
Options	Hopper Hood			0.00	0.00T
Options	20lb Fire Extinguisher			0.00	0.00T
Options	Rear Caution Decal			0.00	0.00T
Options	Sump Chutes			0.00	0.00T

All documents pertaining to and required for financing/loan must be submitted to lienholder before delivery of unit. All payments are required within five business days of delivery.

Date 10242024

Print Jennifer Hobbs

RIVER CITY HYDRAULICS
RCH
SINCE 1982

River City Hydraulics, Inc.
PO Box 6033
Sherwood, AR 72124
Phone: (501) 835-5230
Fax: (501) 834-1233

Purchase Agreement

Date	Estimate #
9/23/2024	22423

Name / Address	Ship To
City of Wynne Public Works 1878 HWY 64 Spur Wynne, AR 72396	City of Wynne Public Works 1878 HWY 64 Spur Wynne, AR 72396

PRICE IS VALID FOR 5 BUSINESS DAYS

P.O. No.	Terms	Rep	Unit Number	Serial Number	VIN
	Due on receipt	DS			

Item	Description	Qty	U/M	Rate	Total
Options	2 year Warranty on Complete Vehicle. Incl Towing			0.00	0.00T
Options	Complete Autolube System for Body and Chassis			0.00	0.00T
	Sourcewell Discount Heil Sourcewell Contract # 091219-THC City of Wynne Sourcewell Member #91407 River City Hydraulics Guaranteed Buyback after 24 months of $245,000 Contingent Upon complete unit meets Terms and Conditions.				

All documents pertaining to and required for financing/loan must be submitted to lienholder before delivery of unit. All payments are required within five business days of delivery.

Signature Jennifer Hobbs Date 10/24/2024

Print Jennifer Hobbs

Subtotal	$418,789.08
Sales Tax (0.0%)	$0.00
Total	$418,789.08

All payments made by credit card will be assesed a 4% processing fee. Overdue invoices will be subject to a monthly finance charge of 3%.

ARVEST

April 30, 2025

City of Wynne,

Please find a financing proposal for the City of Wynne, Arkansas. **This is for your consideration and is not an** offer to extend any financing commitment. Proposal purposes only.

Customer: City of Wynne
Equipment: new Mack ASL
Tax-Exempt Rate: 4.89%
Expiration date: 6-30-2025

Proposed Fin Amt	TERM	Monthly Payment
418,789.08 Mack ASL	25 months	8,678

There are no fees with this proposal and no prepayment penalty.

The financing will be 24 monthly payments "estimated" above followed by a final balloon payment on the 25th month of $245,000.

This is a "triple Net Lease" where the borrower is responsible of license & tax, maintenance, and insurance.

Financing documentations will be provided by Arvest Bank and will be subject to review and approval by Arvest Bank.

Sincerely,

Joey Parker

Arvest Bank
Vice President/Commercial Lender
500 Broadway Little Rock, Arkansas 72201
Cell: 501-837-9776
jparker5@arvest.com

ARVEST

2024 MACK W/HEIL SIDE LOADER Balloon note $213,000

Trade in offer for 2021 Mack Side Loader $120,974.49

City will Owe $92,025.51 on 2024 Mack Balloon note

Remit to:
River City Hydraulics, Inc.
P.O. Box 6033
Sherwood, AR 72124
Phone: (501) 835-5230
Fax: (501) 834-1233

Invoice

Date	Invoice #
6/12/2023	41690

Bill To

City of Wynne Public Works
1878 HWY 64 Spur
Wynne, AR 72396

Ship To

City of Wynne Public Works
1878 HWY 64 Spur
Wynne, AR 72396

P.O. No.	Terms	Due Date	Rep	Ship Date	Ship Via	Unit Number
	Due on receipt	6/12/2023	DS	9/15/2022		

Item	Description	Qty	U/M	Rate	Amount
HEIL DURAPACK ...	Heil 28 yard DuraPack Python Automated Collection SN: 7E7309034 mounted on a New and Unused Mack LR Dual Drive Chassis, VIN: 1M2LR2GC4RM008425	1	ea	383,018.07	383,018.07
SOURCEWELL DIS...	Full Factory Mount 60/90 Belt Grabbers Hopper and Lift Work Lights LED Multi Function LED Strobe Lights Body Back Assist Flood Lights LED Mud Flaps ahead of rear tires Hopper Hood 20lb Fire Extinguisher Infinity Packer Cylinders w/ Scraper Rods 3rd Eye Camera System - 3 Cameras 2 year Warranty on Complete Vehicle. Incl Towing Sourcewell Discount Heil Sourcewell Contract # 091219-THC City of Wynne Sourcewell Member # 91407	1		-7,742.60	-7,742.60T
	River City Hydraulics, Inc Guarantee Buyback after 24 months at $213,000 Contingent Upon Complete Unit Meeting Terms and Conditions				
	Lienholder Information: Arvest Bank PO Box 799 Lowell, AR 72745				

Subtotal	$375,275.47
Sales Tax (0.0%)	$0.00
Total	$375,275.47
Balance Due	$375,275.47

Please include invoice number with payment. Returned items will be subject to a 20% restocking fee. All invoices and account balances paid by credit card will incur a 4% surcharge by the card processor. Please call (501) 835-5230 to explore other payment options. Overdue invoices will be subject to a monthly finance charge of 3%.

Payment Schedule A

CITY OF WYNNE, ARKANSAS-2024 MACK W/HEIL SIDE LOADER 375195949

Computation Interval:	Exact Days
Nominal Annual Rate:	5.550%
Effective Annual Rate:	Undefined%
Periodic Rate:	0.01542%
Daily Rate:	0.01542%

Cash Flow Data - Loan 2

	Event	Date	Amount	Number	Period	End Date
1	Loan	06/20/2023	375,275.47	1		
2	Payment	07/20/2023	8,204.89	24	Monthly	06/20/2025
3	Payment	07/20/2025	213,000.00	1		

TValue Amortization Schedule - U.S. Rule, 360 Day Year

	Date	Payment	Interest	Principal	Balance
1	06/20/2023				375,275.47
1	07/20/2023	8,204.89	1,735.65	6,469.24	368,806.23
2	08/20/2023	8,204.89	1,762.59	6,442.30	362,363.93
3	09/20/2023	8,204.89	1,731.80	6,473.09	355,890.84
4	10/20/2023	8,204.89	1,646.00	6,558.89	349,331.95
5	11/20/2023	8,204.89	1,669.52	6,535.37	342,796.58
6	12/20/2023	8,204.89	1,585.43	6,619.46	336,177.12
2023 Totals		**49,229.34**	**10,130.99**	**39,098.35**	
7	01/20/2024	8,204.89	1,606.65	6,598.24	329,578.88
8	02/20/2024	8,204.89	1,575.11	6,629.78	322,949.10
9	03/20/2024	8,204.89	1,443.85	6,761.04	316,188.06
10	04/20/2024	8,204.89	1,511.12	6,693.77	309,494.29
11	05/20/2024	8,204.89	1,431.41	6,773.48	302,720.81
12	06/20/2024	8,204.89	1,446.75	6,758.14	295,962.67
13	07/20/2024	8,204.89	1,368.83	6,836.06	289,126.61
14	08/20/2024	8,204.89	1,381.78	6,823.11	282,303.50
15	09/20/2024	8,204.89	1,349.18	6,855.71	275,447.79
16	10/20/2024	8,204.89	1,273.95	6,930.94	268,516.85
17	11/20/2024	8,204.89	1,283.29	6,921.60	261,595.25
18	12/20/2024	8,204.89	1,209.88	6,995.01	254,600.24
2024 Totals		**98,458.68**	**16,881.80**	**81,576.88**	
19	01/20/2025	8,204.89	1,216.78	6,988.11	247,612.13
20	02/20/2025	8,204.89	1,183.38	7,021.51	240,590.62

CITY OF WYNNE, ARKANSAS-2024 MACK W/HEIL SIDE LOADER 375195949

	Date	Payment	Interest	Principal	Balance
21	03/20/2025	8,204.89	1,038.55	7,166.34	233,424.28
22	04/20/2025	8,204.89	1,115.57	7,089.32	226,334.96
23	05/20/2025	8,204.89	1,046.80	7,158.09	219,176.87
24	06/20/2025	8,204.89	1,047.48	7,157.41	212,019.46
25	07/20/2025	213,000.00	980.54	212,019.46	0.00
2025 Totals		**262,229.34**	**7,629.10**	**254,600.24**	
Grand Totals		**409,917.36**	**34,641.89**	**375,275.47**	

Last interest amount decreased by 0.05 due to rounding.

ANNUAL PERCENTAGE RATE	FINANCE CHARGE	Amount Financed	Total of Payments
The cost of your credit as a yearly rate.	The dollar amount the credit will cost you.	The amount of credit provided to you or on your behalf.	The amount you will have paid after you have made all payments as scheduled.
5.635%	**$34,641.89**	**$375,275.47**	**$409,917.36**

RIVER CITY HYDRAULICS
RCH
SINCE 1982

River City Hydraulics, Inc.
P.O. Box 6033
Sherwood, AR 72124
Phone: (501) 835-5230
Fax: (501) 834-1233

Purchase Agreement

Date	Estimate #
5/8/2025	25753

Name / Address	Ship To
City of Wynne Public Works 1878 HWY 64 Spur Wynne, AR 72396	City of Wynne Public Works 1878 HWY 64 Spur Wynne, AR 72396

PRICE IS VALID FOR 5 BUSINESS DAYS

P.O. No.	Terms	Rep	Unit Number	Serial Number	VIN
	Due on receipt	RF	352	7E7307859	005241

Item	Description	Qty	U/M	Rate	Total
Used Truck	TRADE IN OFFER CITY OF WYNNE 2021 MACK LR64 HEIL 28YARD ASL VIN # 1M2LR1GC8MM005241 SN #7E7307859 WYNNE UNIT NUMBER 352 ****RCH WILL OFFER THE AMOUNT LISTED FOR UNIT IN DESCRIPTION AS IS. BODY AND CHASSIS REPAIRS HAVE BEEN DEDUCTED FROM OFFER PRICE****			120,974.49	120,974.49T

All documents pertaining to and required for financing/loan must be submitted to lienholder before delivery of unit. All payments are required within five business days of delivery.

Signature _____ Date _____

Print _____

Subtotal	$120,974.49
Sales Tax (0.0%)	$0.00
Total	$120,974.49

Any applicable material surcharges or tariffs imposed on this order prior to delivery will be passed on to the buyer. This will increase the final price at time of delivery.

Initial: ____

City of Wynne

206 S. Falls Blvd
Wynne, Arkansas 72396

JENNIFER HOBBS, MAYOR
jhobbs@cityofwynne.com

(870)238-0027
(870)208-1111 fax

April 30, 2025

Dear Mrs. Watts,

In accordance with the Arkansas Code Annotated 14-58-104 I am issuing this proclamation to you in your role as City Clerk with regards to the decision to single source the purchase of surveillance cameras and technology from Flock Safety.

This decision has been made based on the attached letter from Flock Safety. Flock Safety is the sole provider of proprietary public safety technology that is designed for use by law enforcement, communities and private entities to increase safety and reduce crime. No other vendor offers the combination of technology, cloud-based features, CJIS data handling compliance and network capabilities.

This purchase is being made in conjunction with receiving a Public Safety Equipment Grant (PSEG) and is a collaboration with Cross County Sheriff's Office and Wynne School District. The goal of this project is to increase surveillance capabilities throughout the city to deter criminal activities and increase the safety of our community members and their property.

For your records, a letter from Flock Safety outlining the proprietary nature of their product is attached to this proclamation.

Sincerely,

Jennifer Hobbs
Mayor, City of Wynne

flock safety

2025 Sole Source Letter for Flock Safety® Public Safety Solutions

April 22, 2025

AR - Wynne PD
206 Falls Blvd S
Wynne , Arkansas, 72396

Dear Richard Dennis,

This letter serves to confirm that Flock Group Inc. d/b/a Flock Safety is the sole provider of our proprietary public safety technology solution specifically designed for use by law enforcement, communities, and private entities to increase safety and reduce crime. Flock Safety's unique system integrates hardware and cloud-based software to enable real-time data processing and secure data sharing capabilities that are unavailable through other providers.

As the sole developer and provider of this proprietary technology, Flock Safety retains exclusive rights to manufacture, license, and support the products and software we offer. Our solutions include cutting-edge features such as machine learning analytics, CJIS-compliant data storage, and a centralized system that facilitates collaboration across multiple jurisdictions, supporting a more robust and efficient public safety network. Specifically, Flock Safety provides the ability to access additional cameras from Flock customers, including: NA, at no additional cost.

No other vendor offers the specific combination of hardware and cloud-based features, CJIS-compliant data handling, or the national network capabilities that Flock Safety provides. For these reasons, Flock Safety is the only source available for these services.

Thank you,

Garrett Langley CEO, Flock Safety®

flock safety

Flock Safety® LPR Cameras

Flock Safety® is the sole manufacturer, developer, and distributor of Flock Safety® LPR Camera, Flock Safety® Long-Range LPR, Flock Safety® Short-Range LPR, Flock Safety® Flex LPR Camera, Flock Safety® LPR Camera for Neighborhoods, and Flock Safety® LPR Video Integration.

Flock Safety® LPR Camera

- Fixed, infrastructure-free license plate recognition ("LPR") cameras suitable for capturing two (2+) lanes of traffic simultaneously with a single camera from a vertical mass
- Includes Flock Safety® solar LPR camera option (next-gen platform standard range), which may cover up to three (3) lanes of traffic simultaneously

Flock Safety® Long-Range LPR

- Fixed, infrastructure-free long-range ("LR") LPR, suitable for capturing three (3+) lanes of traffic simultaneously with a single camera from a vertical mass
- Includes Flock Safety® solar LR LPR option (next-gen platform LR)

Flock Safety® Short-Range LPR

- Fixed, infrastructure-free short-range ("SR") LPR with solar power capability, suitable for wide angle capture (i.e., parking lots or garages)

Flock Safety® Flex LPR Camera

- Location-flexible, infrastructure-free self-installation LPR camera with solar power option
- Ties seamlessly into the Flock Safety® ecosystem with a small and lightweight camera
- Ability to read up to 30,000 license plates and vehicle attributes on a single battery charge

Flock Safety® LPR Camera for Neighborhoods

- Infrastructure- and maintenance-free LPR for 24/7 neighborhood security

Flock Safety® LPR Video Integration

- Integrates third-party LPR and video cameras into FlockOS® utilizing existing camera infrastructures

The Flock Safety® LPR cameras listed above are the only Law Enforcement Grade LPR cameras to offer the following combination of proprietary features:

- **Vehicle Fingerprint Technology®**
  - Patented proprietary machine vision to analyze vehicle license plate, state recognition, and vehicle attributes such as color, type, make and objects (roof rack, bumper stickers, etc.) based on image analytics (not car registration data)
  - Machine vision to capture and identify characteristics of vehicles with a paper license plate and vehicles with the absence of a license plate
  - Ability to "Save Search" based on description of vehicles using Flock's patented Vehicle Fingerprint Technology® without the need for a license plate, and set

up alerts based on vehicle description
- Only LPR provider with "Visual Search," which can transform digital images from any source into an investigative lead by finding matching vehicles based on the vehicle attributes in the uploaded photo

- **Integrated Cloud-Software & Hardware Platform**
  - Best in class ability to capture and process up to 30,000 vehicles per day with a single camera powered exclusively by solar power
  - Wireless deployment of solar powered license plate reading cameras with integrated cellular communication weighing less than 5lbs and able to be powered solely by a solar panel of 65W or less
  - Web based footage retrieval tool with filtering capabilities such as vehicle color, vehicle type, vehicle manufacturer, partial or full license plate, state of license plate, and object detection
  - Utilizes motion trigger to start and stop recording without the need for a reflective plate
  - Motion detection allows for unique vehicle cases such as bicycle capture, ATV, motorcycle, etc.
  - On device machine processing to limit LTE bandwidth consumption
  - All images and metadata is encrypted throughout its entire lifecycle from on-device to storage in Flock's US-based CJIS-compliant cloud
  - Covert industrial design for minimizing visual pollution

- **Transparency & Ethical Product Design**
  - One-of-a-kind "Transparency Portal," a public-facing dashboard that details the customer's policies, as well as automatically updates metrics from the Flock Safety® system
  - Built-in integration with National Center for Missing & Exploited Children ("NCMEC") to receive AMBER Alerts to find missing children
  - Privacy controls to enable certain vehicles to "opt-out" of being captured

- **Integrated Gunshot Detection**
  - Ability to pair with Flock Safety® gunshot detection device, which has natively integrated gunshot detection capabilities utilizing machine learning to recognize audio signatures typical of crimes in progress (e.g., gunshots)

- **Live Video Integration**
  - Ability to apply computer vision to third-party cameras using the Flock Safety® LPR video integration, transforming them into evidence capture devices using the same Vehicle Fingerprint® technology offered on the Flock Safety® LPR cameras
  - Flock Safety® video integration livestream integrates live stream traffic cameras, publicly or privately owned livestream security cameras into one cloud-based situational awareness dashboard to increase response time in mission-critical incidents
  - Manage various government intelligence including LPR, livestream cameras, computer-aided dispatch ("CAD"), automatic vehicle location ("AVL") on Flock Safety® video integration suite

flock safety

- **Situational Awareness**
  - FlockOS® is the world's first and only public safety operating system compatible with Flock Safety® LPR video cameras, including live streaming fixed and pan-tilt-zoom ("PTZ") video cameras, and the Flock Safety® gunshot detection device, while seamlessly integrating first and third-party data across video, LPR, and audio to deliver real-time intelligence and retroactive crime solving in a single-pane real-time crime center
  - Ability to enhance situational awareness capacity by layering all intelligence streams onto the FlockOS® ESRI-based map
  - FlockOS® features Flock Safety® unique Real-Time Routing feature that analyzes various data sources to determine where a suspect vehicle has been and its direction of travel, providing users with possible outcomes based on a confidence threshold

- **Warranty & Service**
  - Lifetime maintenance and support included in subscription price
  - Flock Safety® is the only fully integrated LPR one-stop solution from production of the devices to delivery and installation
  - Performance monitoring software to predict potential failures, obstructions, tilts, and other critical or minor issues

- **Partnerships**
  - Flock Safety® is the only LPR provider to officially partner with Prepared911 to distribute 911 call audio and transcripts to law enforcement agencies
  - Through FlockOS®, Flock Safety® is the only LPR provider to officially partner with FirstTwo to enable clicking anywhere on a display map to display the relevant information from FirstTwo
  - Access to additional cameras purchased by Flock's HOA and private business partners, means an ever-increasing amount of cameras and data at no additional cost

flock safety

Flock Safety® Video Cameras

Flock Safety® is the sole manufacturer, developer, and distributor of the Flock Safety® video cameras and Flock Safety® video integration.

Flock Safety® Fixed Video Camera

- Fixed, live, and record video ideal for building exteriors and city streets
- Available with AC or solar power
- Subscription-based live and recorded video solution, including hardware, cellular, installation, ongoing maintenance, and a cloud-based video management system, which allows officers to remotely view instant replay of downloadable live on-scene video with pan-tilt-zoom ("PTZ") controls and 25X optical zoom without the need for additional camera network set-up, installation, or up-keep
- Improves safety with live and recorded video for enhanced situational awareness and case clearance

Flock Safety® PTZ Video Camera

- Live and recorded video with remote PTZ controls ideal for open areas such as intersections or parks
- Subscription-based live and recorded video solution, including hardware, cellular, installation, ongoing maintenance, and a cloud-based video management system, which allows officers to remotely view instant replay of downloadable live on-scene video with PTZ controls and 25X optical zoom without the need for additional camera network set-up, installation, or up-keep
- Improves safety with live and recorded video for enhanced situational awareness and case clearance

Flock Safety® Video Integration

- Allows customers to easily integrate video cameras into FlockOS® for a seamless workflow
- Ability to apply computer vision to third-party cameras, transforming them into evidence capture devices using the same Vehicle Fingerprint® technology offered on the Flock Safety® LPR cameras
- Flock Safety® video integration livestream integrates live stream traffic cameras, publicly or privately owned livestream security cameras into one cloud-based situational awareness dashboard to increase response time in mission-critical incidents
- Manage various government intelligence, including LPR and livestream cameras, on Flock Safety® video integration suite
- Ability to access live and recorded video using Flock Safety® video cameras

The Flock Safety® video cameras listed above are the only Law Enforcement Grade video cameras to offer the following combination of proprietary features:

- **Vehicle Fingerprint Technology®**
  - Patented proprietary machine vision to analyze vehicle license plate, state recognition, and vehicle attributes such as color, type, make and objects (roof rack, bumper stickers, etc.) based on image analytics (not car registration data)

- Machine vision to capture and identify characteristics of vehicles with a paper license plate and vehicles with the absence of a license plate
- Ability to "Save Search" based on description of vehicles using Flock's patented Vehicle Fingerprint Technology® without the need for a license plate, and set up alerts based on vehicle description
- Only LPR provider with "Visual Search," which can transform digital images from any source into an investigative lead by finding matching vehicles based on the vehicle attributes in the uploaded photo

- **Integrated Cloud-Software & Hardware Platform**
  - Best in class ability to capture and process up to 30,000 vehicles per day with a single device powered exclusively by solar power
  - Wireless deployment of solar powered license plate reading cameras with integrated cellular communication weighing less than 5lbs and able to be powered solely by a solar panel of 60W or less
  - Web based footage retrieval tool with filtering capabilities such as vehicle color, vehicle type, vehicle manufacturer, partial or full license plate, state of license plate, and object detection
  - Utilizes motion capture to start and stop recording without the need for a reflective plate
  - Motion detection allows for unique cases such as bicycle capture, ATV, motorcycle, etc.
  - On device machine processing to limit LTE bandwidth consumption
  - All images and metadata is encrypted throughout its entire lifecycle from on-device to storage in Flock's US-based CJIS-compliant cloud
  - Covert industrial design for minimizing visual pollution

- **Transparency & Ethical Product Design**
  - One-of-a-kind "Transparency Portal," a public-facing dashboard that details the policies in place by the purchaser, as well as automatically updated metrics from the Flock Safety® system
  - Built-in integration with National Center for Missing & Exploited Children ("NCMEC") to receive AMBER Alerts to find missing children
  - Privacy controls to enable certain vehicles to "opt-out" of being captured

- **Integrated Gunshot Detection**
  - Ability to pair with Flock Safety® gunshot detection device, which has natively integrated gunshot detection capabilities utilizing machine learning to recognize audio signatures typical of crimes in progress (e.g., gunshots)

- **Live Video Integration**
  - Ability to apply computer vision to third-party cameras using the Flock Safety® LPR video integration, transforming them into evidence capture devices using the same Vehicle Fingerprint® technology offered on the Flock Safety® LPR cameras
  - Flock Safety® video integration livestream integrates live stream traffic cameras, publicly or privately owned livestream security cameras into one cloud-based situational awareness dashboard to increase response time in mission-critical incidents

- Manage various government intelligence including LPR, livestream cameras, CAD, automatic vehicle location ("AVL") on Flock Safety® video integration suite
- Ability to access live and recorded video using Flock Safety® video cameras, a subscription video solution which allows officers to remotely view instant replay of downloadable live on-scene video with PTZ controls and 25X optical zoom without the need for additional camera network set-up, installation, or up-keep.

- **Situational Awareness**
  - FlockOS® is the world's first and only public safety operating system compatible with Flock Safety® LPR video cameras, including Flock Safety® live streaming fixed video cameras and PTZ video cameras, and the Flock Safety® gunshot detection device, while seamlessly integrating first and third-party data across video, LPR, and audio to deliver real-time intelligence and retroactive crime solving in a single-pane real-time crime center
  - Ability to enhance situational awareness capacity by layering all intelligence streams onto the FlockOS® ESRI-based map
  - FlockOS® features Flock Safety® unique Real-Time Routing feature that analyzes various data sources to determine where a suspect vehicle has been and its' direction of travel providing users with possible outcomes based on a confidence threshold

- **Warranty & Service**
  - Lifetime maintenance and support included in subscription price
  - Flock Safety® is the only fully integrated LPR one-stop solution from production of the device to delivery and installation
  - Performance monitoring software to predict potential failures, obstructions, tilts, and other critical or minor issues

- **Partnerships**
  - Flock Safety® is the only LPR provider to officially partner with Prepared911 to distribute 911 call audio and transcripts to law enforcement agencies
  - Through FlockOS, Flock Safety® is the only LPR provider to officially partner with FirstTwo to enable clicking anywhere on a display map to display the relevant information from FirstTwo
  - Access to additional cameras purchased by Flock's HOA and private business partners, means an ever-increasing amount of cameras and data at no additional cost
  - Flock Safety® is the only LPR provider to officially partner with Wanco, Inc. to offer the Flock Safety's Mobile Security Trailer, an infrastructure-free solution designed to provide a movable public safety presence.
  - The Flock Safety Mobile Security Trailer combines:
    - Two (2) PTZ video cameras that are equipped with remote controls for live and recorded video
    - One (1) multi-sensor 360 panoramic camera that offers situational awareness with live views from four different angles for comprehensive coverage
    - Flashing Blue Lights that provides a clear signal that law enforcement is monitoring the area, acting as a visual crime deterrent

flock safety

- Integration with the FlockOS platform, centralizing live monitoring, evidence capture, and case management across all locations
- Optional feature: Can include LPR functionality, which is compatible with the FlockOS platform
- 24/7 real-time alerts, notifying law enforcement of incidents and allowing for customizable monitoring during off-hours using advanced AI for human and vehicle detection

flock safety

Flock Safety® Software

Flock Safety® is the sole provider of the comprehensive monitoring, processing, and machine vision services, including FlockOS®, Flock911, Flock Safety® Traffic Analytics for Businesses, Flock Safety® Advanced Investigations Analytics, and Flock Safety® Traffic Analytics for Government, which integrate with Flock Safety® LPR cameras, Flock Safety® video cameras, and the Flock Safety® gunshot detection device.

FlockOS®

- Public safety platform that unifies first and third-party data across LPR, video, and audio to deliver real-time intelligence
- FlockOS® is the world's first and only public safety operating system compatible with Flock Safety® license plate recognition ("LPR") video cameras, including Flock Safety® live streaming fixed and pan-tilt-zoom ("PTZ") video cameras, and the Flock Safety® gunshot detection device, while seamlessly integrating first and third-party data across video, LPR, and audio to deliver real-time intelligence and retroactive crime solving in a single-pane real-time crime center
- Ability to enhance situational awareness capacity by layering all intelligence streams onto the FlockOS® ESRI-based map
- FlockOS® features Flock Safety™ unique Real-Time Routing feature that analyzes various data sources to determine where a suspect vehicle has been and its' direction of travel providing users with possible outcomes based on a confidence threshold
- Through FlockOS, Flock Safety® is the only LPR provider to officially partner with FirstTwo to enable clicking anywhere on a display map to display relevant information from FirstTwo

Flock911

- Real-time 911 calls and caller-sourced media for enhanced situational clarity in MDTs and Real Time Crime Centers ("RTCCs")
- FlockOS® is the only product on the market that works with Prepared911 to distribute 911 call audio and transcripts to law enforcement agencies directly

Flock Safety® Traffic Analytics for Businesses

- Provides customers with actionable visitor insights from their LPR network to enhance marketing and operations efforts

Flock Safety® Advanced Investigations Analytics

- Allows customers to leverage their LPR network to expand theft and organized crime cases

Flock Safety® Traffic Analytics for Government

- Allows customers to unlock the potential of their LPR network for critical traffic management insights

CITY OF WYNNE

ORDINANCE NUMBER 912

AN ORDINANCE SETTING FORTH CERTAIN REGULATIONS FOR THE SALE OF ALCOHOL, BEER, AND WINE FOR ON-PREMISES CONSUMPTIONS IN THE CITY LIMITS OF WYNNE, ARKANSAS

WHEREAS, in order to comply with the applicable state laws and to promote the competitiveness and orderly operating of businesses which will sell spirits, beer, and wine on-premises in Wynne, the City Council adopts the following regulations;

NOW, THEREFORE, BE IT HEREBY ORDAINED BY THE CITY COUNCIL OF THE CITY OF WYNNE, ARKANSAS:

SECTION 1: That the City of Wynne, Arkansas hereby recognizes that the sale of spirits, beer, and wine by the drink is thoroughly regulated by the State of Arkansas, and nothing in this Ordinance shall contradict the laws of the State of Arkansas.

SECTION 2: The City of Wynne hereby authorizes, by this Ordinance, the sale of alcoholic spirits, beer, and wine by the drink for on premises consumption by those who are granted a permit to do so by the City.

SECTION 3: The definitions, terms, and provisions of Arkansas Code Annotated 3-1-101. et seq., as amended from time to time, and all regulations promulgated thereunder relating to liquor, beer, and wine, are hereby adopted and made a part of this Ordinance. Applicants for and holders of permits and other persons shall conform to the provisions set forth in statutes and regulations promulgated thereunder and to the provisions of this Ordinance. Violations of the state statutes and regulations, which are adopted and incorporated by reference into this Ordinance, shall subject the offender, upon conviction, to the penalties prescribed by state law.

SECTION 4: It shall be unlawful for any person to engage in the business of distributing, selling, or dispensing, any controlled beverage within the city without a permit issued by the city, or with an expired permit. The provisions of this section shall not apply to the manufacture, sale, and distribution of spirituous liquor, wines or vinous liquors, beer or malt liquors manufactured, sold, and distributed by a manufacturer or wholesaler of these products to a licensed permittee.

SECTION 5: Any person or entity which applies for and receives a permit from the Alcoholic Beverage Control Board shall pay to the City of Wynne an annual permit fee of five hundred dollars ($500.00) on a calendar year basis. An annual renewal fee in the same amount shall be paid to the city collector on or before January first of each year. The fee for permits applied for and received after January first of any year shall be pro-rated on a monthly basis for that particular year. Permits are not transferrable.

SECTION 6: It shall be unlawful for any person within the City of Wynne to sell intoxicating liquor, beer or wine before 10:00a.m. or after 10:00p.m.

SECTION 7: Any person convicted of violating this Ordinance shall be punished up to the maximum sentence provided in Ark. Code Ann. 3-9-204, if applicable; In Addition to any penalties imposed by the State for a permit violation, any person, firm, or corporation and any employee thereof violating the provisions of this Ordinance shall, upon conviction, for a first offense be fined not less than $100.00 but not more than $500.00; for a second offense, be fined not less than $500.00 but not more than $1000.00; and each subsequent offense thereafter be fined not less than $1,000.00 but not more than $1,500.00 for each such separate offense. For purposes of this section, it is considered a separate violation for each person served or permitted to consume alcoholic beverages contrary to the provisions of this Ordinance.

PASSED AND APPROVED on this ____ day of _____, 2025.

_____
Jennifer Hobbs, Mayor

_____
Emily Watts, City Clerk

CITY OF WYNNE
ORDINANCE NUMBER 913

AN ORDINANCE ESTABLISHING A SUPPLEMENTAL TAX
ON ALCOHOLIC BEVERAGES AND FOR OTHER PURPOSES.

WHEREAS, the business of manufacturing, transporting, storing, handling, receiving, distributing, selling, serving, or dispensing any controlled beverage within the City of Wynne, is a privilege, and for the exercise of such privilege there are hereby imposed the regulations, requirements, restrictions, fees, and taxes as set forth in this ordinance; and

WHEREAS, Arkansas Code Annotated Section 3-9-214 authorizes a supplemental taxes on licensed premises; and

WHEREAS, all premises legally serving alcoholic beverages in the City of Wynne are licensed by the State through the Alcoholic Beverage Control Division.

NOW, THEREFORE be it ordained by the City Council of the City of Wynne, Arkansas:

Section 1. Alcoholic beverage means all intoxicating liquors of any sort, including beer and wine.

Section 2. That there is hereby imposed and levied a city supplemental tax of Five percent (5%) upon the annual gross receipts which are derived from charges for the following services:

a. For the preparation and serving of mixed drinks, and

b. For the cooling and serving of beer, light wine, and wine.

Section 3. The City of Wynne supplemental beverage tax is in addition to the state supplemental tax and shall be paid to the City of Wynne and remitted to the Deputy Treasurer at 206 S. Falls Blvd. It shall be due monthly at the same time that the state supplemental tax is due, and shall be accompanied by one copy of the state supplemental tax return. If any permittee shall fail to remit the supplemental tax within the time period that the state tax is due, a penalty of 10% of the tax due shall be due and payable in addition to the tax.

PASSED AND APPROVED on this ____ day of _____, 2025.

_____
Jennifer Hobbs, Mayor

_____
Emily Watts, City Clerk

General Fund
Balance Sheets
5 Year Comparative
04-30-2025

		Book Value Apr 2025 Actual	Book Value Apr 2024 Actual	Book Value Apr 2023 Actual	Book Value Apr 2022 Actual	Book Value Apr 2021 Actual
Assets						
Current Assets						
Cash						
	Cross Bank CD	1,460,303.50	1,009,191.32		341,523.35	338,368.24
	First Financial Bank C/D	899,150.79	509,255.32			
	General Fund Bank AC	1,047,782.52	1,060,430.86	719,686.34	776,376.78	575,982.26
	Partners Bank CD			866,776.84		
	Total Current Assets	**$3,407,236.81**	**$2,578,877.50**	**$1,586,463.18**	**$1,117,900.13**	**$914,350.50**
	Total Assets	**$3,407,236.81**	**$2,578,877.50**	**$1,586,463.18**	**$1,117,900.13**	**$914,350.50**
Liabilities						
Current Liabilities						
Payroll Liabilities						
	AR Employment Security	41.67	36.25	59.78	192.93	316.14
	Child Support Enforcement, Off	(1,617.76)				
	Lively Inc Payable		(46.16)			
	Municipal Health Benefit Fund	6,126.68		(5.00)	(998.20)	
	Ark Sales Tax	(5,125.50)	1,462.02	567.96	563.70	147.63
	Total Current Liabilities	**($574.91)**	**$1,452.11**	**$622.74**	**($241.57)**	**$463.77**
	Total Liabilities	**($574.91)**	**$1,452.11**	**$622.74**	**($241.57)**	**$463.77**
Fund Balance						
Suplus Carryover						
	Current Net Income	1,015,797.74	185,411.41	144,861.28	12,750.87	44,702.74
	General Fund Balance	2,392,013.98	2,392,013.98	1,440,979.16	1,105,390.83	869,183.99
	Total Fund Balance	**$3,407,811.72**	**$2,577,425.39**	**$1,585,840.44**	**$1,118,141.70**	**$913,886.73**
	Total Liabilities and Equity	**$3,407,236.81**	**$2,578,877.50**	**$1,586,463.18**	**$1,117,900.13**	**$914,350.50**

General Fund

Statement of Revenue and Expenditures

		Current Period Apr 2025 Apr 2025 Actual	Year-To-Date Jan 2025 Apr 2025 Actual	Annual Budget Jan 2025 Dec 2025	Annual Budget Jan 2025 Dec 2025 Variance	Jan 2025 Dec 2025 Percent of Budget
Revenue & Expenditures						
Revenue						
00-General Revenues						
	Grant	0.00	270,528.00	125,000.00	145,528.00	216.4%
	Insurance Proceeds	0.00	3,306.88	0.00	3,306.88	
	Pension/Pol,Fire,Court	1,181.04	4,724.16	0.00	4,724.16	
051	State Turnbacks	595.00	2,380.00	120,520.00	(118,140.00)	2.0%
052	General & Property Tax	17,046.72	98,701.85	550,000.00	(451,298.15)	17.9%
055	Entergy Corp	88,026.74	176,053.48	340,000.00	(163,946.52)	51.8%
056	CenterPoint Energy	0.00	4,392.46	4,400.00	(7.54)	99.8%
057	SBC	0.00	850.80	2,500.00	(1,649.20)	34.0%
058	Woodruff Electric	15,376.85	29,014.19	61,000.00	(31,985.81)	47.6%
059	Wynne Cable TV	613.88	2,521.10	7,000.00	(4,478.90)	36.0%
060	Wynne Water Utilities	1,000.00	3,000.00	12,000.00	(9,000.00)	25.0%
061	Ritter Communications	0.00	823.27	1,800.00	(976.73)	45.7%
064	Privilege Tax	1,770.51	4,368.41	44,000.00	(39,631.59)	9.9%
066	Building Permits	77,362.42	101,526.60	45,000.00	56,526.60	225.6%
069	Intox Detection Fees	44.47	177.88	500.00	(322.12)	35.6%
070	Municipal Court Fines	20,578.43	63,631.94	165,000.00	(101,368.06)	38.6%
071	Court Fees	692.64	2,770.56	7,900.00	(5,129.44)	35.1%
072	DWI Funds	608.52	2,434.08	7,000.00	(4,565.92)	34.8%
073	Small Claims	491.64	1,949.06	4,500.00	(2,550.94)	43.3%
074	City Sales Tax	66,240.84	274,546.48	805,000.00	(530,453.52)	34.1%
074A	City Sales Tax-Police & Fire	31,530.64	130,639.60	381,800.00	(251,160.40)	34.2%
074B	City Sales Tax-City Projects	28,388.91	117,622.66	345,000.00	(227,377.34)	34.1%
075	General Sales Tax	8,514.81	42,354.38	102,200.00	(59,845.62)	41.4%
076	Local Option Sales Tax	133,002.45	560,835.05	1,500,000.00	(939,164.95)	37.4%
077	Mueller Industries	0.00	0.00	50,000.00	(50,000.00)	
081	Sanitation-Class 3 & 4	15,149.86	37,148.29	125,000.00	(87,851.71)	29.7%
083	Sanitation Fees	142,369.95	560,689.21	1,510,000.00	(949,310.79)	37.1%
090	Fire Department	20.00	1,284.43	7,500.00	(6,215.57)	17.1%
091	Police Department	8,077.89	14,738.65	48,000.00	(33,261.35)	30.7%
092	Interest on Investments	15,870.31	17,428.14	40,000.00	(22,571.86)	43.6%
093	Sales of Equipment	2,475.00	2,475.00	0.00	2,475.00	
094	District Court	36,962.50	39,777.65	69,345.00	(29,567.35)	57.4%
094A	Misc Income	0.00	0.00	1,000.00	(1,000.00)	
	00-General Revenues Totals	**$713,992.02**	**$2,572,694.26**	**$6,482,965.00**	**($3,910,270.74)**	

General Fund

Statement of Revenue and Expenditures

		Current Period Apr 2025 Apr 2025 Actual	Year-To-Date Jan 2025 Apr 2025 Actual	Annual Budget Jan 2025 Dec 2025	Annual Budget Jan 2025 Dec 2025 Variance	Jan 2025 Dec 2025 Percent of Budget
Revenue & Expenditures						
Expenses						
01-Mayor						
101	Salaries	5,598.14	22,321.41	72,780.00	(50,458.59)	30.7%
103	Unemployment Comp	0.00	1.98	0.00	1.98	
105	Insurance	549.71	2,237.58	6,500.00	(4,262.42)	34.4%
107A	Social Security	347.08	1,383.91	4,512.36	(3,128.45)	30.7%
107B	Medicare	81.16	323.61	1,055.00	(731.39)	30.7%
110	Pension	991.78	3,954.44	13,000.00	(9,045.56)	30.4%
117	Office Supplies	0.00	239.74	1,800.00	(1,560.26)	13.3%
120	Telephone	85.64	171.28	0.00	171.28	
135	Minor Equipment	0.00	0.00	2,500.00	(2,500.00)	
180	Travel & Business	505.40	1,019.90	4,000.00	(2,980.10)	25.5%
	01-Mayor Totals	**$8,158.91**	**$31,653.85**	**$106,147.36**	**($74,493.51)**	

General Fund

Statement of Revenue and Expenditures

		Current Period Apr 2025 Apr 2025 Actual	Year-To-Date Jan 2025 Apr 2025 Actual	Annual Budget Jan 2025 Dec 2025	Annual Budget Jan 2025 Dec 2025 Variance	Jan 2025 Dec 2025 Percent of Budget
Revenue & Expenditures						
Expenses						
02-City Council						
101	Salaries	5,279.00	21,116.00	63,350.00	(42,234.00)	33.3%
105	Insurance	3,313.48	17,136.11	64,800.00	(47,663.89)	26.4%
107A	Social Security	325.04	1,302.42	3,950.00	(2,647.58)	33.0%
107B	Medicare	75.98	304.44	950.00	(645.56)	32.0%
	02-City Council Totals	**$8,993.50**	**$39,858.97**	**$133,050.00**	**($93,191.03)**	

General Fund

Statement of Revenue and Expenditures

		Current Period Apr 2025 Apr 2025 Actual	Year-To-Date Jan 2025 Apr 2025 Actual	Annual Budget Jan 2025 Dec 2025	Annual Budget Jan 2025 Dec 2025 Variance	Jan 2025 Dec 2025 Percent of Budget
Revenue & Expenditures						
Expenses						
03-City Clerk						
101	Salaries	527.90	2,111.60	6,335.00	(4,223.40)	33.3%
103	Unemployment Comp	0.00	(0.01)	0.00	(0.01)	
105	Insurance	539.58	2,158.37	6,500.00	(4,341.63)	33.2%
107A	Social Security	32.73	130.92	400.00	(269.08)	32.7%
107B	Medicare	7.65	30.60	100.00	(69.40)	30.6%
110	Pension	94.07	451.28	1,150.00	(698.72)	39.2%
117	Office Supplies	0.00	642.87	3,000.00	(2,357.13)	21.4%
119	Utilities	232.24	1,224.17	4,000.00	(2,775.83)	30.6%
120	Telephone	200.08	800.32	3,000.00	(2,199.68)	26.7%
125	Information Technology	1,111.66	1,111.66	0.00	1,111.66	
	03-City Clerk Totals	**$2,745.91**	**$8,661.78**	**$24,485.00**	**($15,823.22)**	

General Fund

Statement of Revenue and Expenditures

		Current Period Apr 2025 Apr 2025 Actual	Year-To-Date Jan 2025 Apr 2025 Actual	Annual Budget Jan 2025 Dec 2025	Annual Budget Jan 2025 Dec 2025 Variance	Jan 2025 Dec 2025 Percent of Budget
Revenue & Expenditures						
Expenses						
04-Finance Dept						
101	Salaries	3,842.97	15,371.88	50,000.00	(34,628.12)	30.7%
103	Unemployment Comp	0.00	27.78	215.00	(187.22)	12.9%
105	Insurance	583.45	2,471.81	13,000.00	(10,528.19)	19.0%
107A	Social Security	238.26	953.04	3,100.00	(2,146.96)	30.7%
107B	Medicare	55.72	222.88	725.00	(502.12)	30.7%
110	Pension	496.38	1,985.52	6,500.00	(4,514.48)	30.5%
117	Office Supplies	50.00	394.42	1,000.00	(605.58)	39.4%
135	Minor Equipment	0.00	750.00	2,000.00	(1,250.00)	37.5%
	04-Finance Dept Totals	**$5,266.78**	**$22,177.33**	**$76,540.00**	**($54,362.67)**	

General Fund

Statement of Revenue and Expenditures

		Current Period Apr 2025 Apr 2025 Actual	Year-To-Date Jan 2025 Apr 2025 Actual	Annual Budget Jan 2025 Dec 2025	Annual Budget Jan 2025 Dec 2025 Variance	Jan 2025 Dec 2025 Percent of Budget
Revenue & Expenditures						
Expenses						
05-Legal Dept						
101	Salaries	3,653.91	14,615.64	43,847.00	(29,231.36)	33.3%
105	Insurance	0.00	80.00	6,475.00	(6,395.00)	1.2%
107A	Social Security	226.54	906.16	2,700.00	(1,793.84)	33.6%
107B	Medicare	52.98	211.92	650.00	(438.08)	32.6%
110	Pension	651.13	2,679.52	8,300.00	(5,620.48)	32.3%
180	Travel & Business	0.00	0.00	600.00	(600.00)	
	05-Legal Dept Totals	**$4,584.56**	**$18,493.24**	**$62,572.00**	**($44,078.76)**	

General Fund

Statement of Revenue and Expenditures

		Current Period Apr 2025 Apr 2025 Actual	Year-To-Date Jan 2025 Apr 2025 Actual	Annual Budget Jan 2025 Dec 2025	Annual Budget Jan 2025 Dec 2025 Variance	Jan 2025 Dec 2025 Percent of Budget
Revenue & Expenditures						
Expenses						
06-General Administration						
105	Insurance	3,945.47	27,048.02	46,000.00	(18,951.98)	58.8%
108	Workers Comp	0.00	834.27	42,000.00	(41,165.73)	2.0%
110	Pension	1,012.34	3,012.32	8,000.00	(4,987.68)	37.7%
111	Fire Insurance	0.00	14,270.35	12,100.00	2,170.35	117.9%
113	Contract Labor	480.00	1,800.00	6,240.00	(4,440.00)	28.8%
116	Publications & Dues	0.00	31,217.50	15,000.00	16,217.50	208.1%
123	Election Fees	0.00	0.00	7,000.00	(7,000.00)	
125	Information Technology	0.00	1,667.49	7,500.00	(5,832.51)	22.2%
139	Building & Grounds	1,559.48	3,558.48	10,000.00	(6,441.52)	35.6%
181	Travel & Training	2,100.00	6,915.36	16,500.00	(9,584.64)	41.9%
194	Contracted Aid	0.00	0.00	14,500.00	(14,500.00)	
195	Misc Expense	(208.82)	217.74	10,000.00	(9,782.26)	2.2%
196	Disaster	9,509.76	37,981.55	57,600.00	(19,618.45)	65.9%
199	Economic Development	66,240.84	274,452.93	805,000.00	(530,547.07)	34.1%
06-General Administration Totals		**$84,639.07**	**$402,976.01**	**$1,057,440.00**	**($654,463.99)**	

General Fund

Statement of Revenue and Expenditures

		Current Period Apr 2025 Apr 2025 Actual	Year-To-Date Jan 2025 Apr 2025 Actual	Annual Budget Jan 2025 Dec 2025	Annual Budget Jan 2025 Dec 2025 Variance	Jan 2025 Dec 2025 Percent of Budget
Revenue & Expenditures						
Expenses						
07-Police Dept						
101	Salaries	92,128.72	368,452.90	1,306,600.00	(938,147.10)	28.2%
102	Shared Salaries	0.00	8,000.00	35,000.00	(27,000.00)	22.9%
103	Unemployment Comp	9.52	761.24	5,650.00	(4,888.76)	13.5%
105	Insurance	12,001.78	45,421.01	156,000.00	(110,578.99)	29.1%
107A	Social Security	5,674.60	22,716.90	81,050.00	(58,333.10)	28.0%
107B	Medicare	1,327.14	5,312.99	18,950.00	(13,637.01)	28.0%
108	Workers Comp	0.00	11,012.43	0.00	11,012.43	
110	Pension	21,002.72	84,398.79	314,000.00	(229,601.21)	26.9%
115	Uniform Allowance	0.00	0.00	20,500.00	(20,500.00)	
117	Office Supplies	997.47	4,745.11	19,000.00	(14,254.89)	25.0%
119	Utilities	232.22	1,224.15	4,000.00	(2,775.85)	30.6%
120	Telephone	1,537.30	6,211.60	18,600.00	(12,388.40)	33.4%
125	Information Technology	3,841.66	9,604.15	23,100.00	(13,495.85)	41.6%
131	Equipment Repairs	1,153.75	4,377.66	25,000.00	(20,622.34)	17.5%
133	Vehicle Insurance	353.13	8,655.96	9,000.00	(344.04)	96.2%
134	Radio Maintenance	0.00	0.00	2,500.00	(2,500.00)	
135	Minor Equipment	823.41	14,830.51	30,000.00	(15,169.49)	49.4%
136	Capital Outlay	1,585.80	149,408.91	155,000.00	(5,591.09)	96.4%
151	Gas & Oil	83.42	9,121.15	80,000.00	(70,878.85)	11.4%
160	Tires & Tubes	0.00	1,134.70	5,000.00	(3,865.30)	22.7%
181	Travel & Training	479.56	5,568.24	9,250.00	(3,681.76)	60.2%
187	Jail Services	0.00	13,625.00	72,000.00	(58,375.00)	18.9%
190	Animal Board	1,379.92	5,783.99	20,000.00	(14,216.01)	28.9%
	07-Police Dept Totals	**$144,612.12**	**$780,367.39**	**$2,410,200.00**	**($1,629,832.61)**	

General Fund

Statement of Revenue and Expenditures

		Current Period Apr 2025 Apr 2025 Actual	Year-To-Date Jan 2025 Apr 2025 Actual	Annual Budget Jan 2025 Dec 2025	Annual Budget Jan 2025 Dec 2025 Variance	Jan 2025 Dec 2025 Percent of Budget
Revenue & Expenditures						
Expenses						
08-Fire Dept						
101	Salaries	41,999.89	164,312.34	672,000.00	(507,687.66)	24.5%
102	Shared Salaries	0.00	6,400.00	35,000.00	(28,600.00)	18.3%
103	Unemployment Comp	0.00	327.26	2,900.00	(2,572.74)	11.3%
104	Unsworn Personnel	3,723.04	14,892.16	97,000.00	(82,107.84)	15.4%
105	Insurance	5,334.21	19,012.10	78,000.00	(58,987.90)	24.4%
107A	Social Security	173.09	641.81	0.00	641.81	
107B	Medicare	657.36	2,575.87	11,200.00	(8,624.13)	23.0%
108	Workers Comp	0.00	10,094.71	0.00	10,094.71	
110	Pension	11,839.65	46,544.36	163,000.00	(116,455.64)	28.6%
111	Fire Insurance	0.00	12,881.63	10,950.00	1,931.63	117.6%
115	Uniform Allowance	9,931.74	10,544.74	25,100.00	(14,555.26)	42.0%
117	Office Supplies	3,126.67	7,926.67	15,000.00	(7,073.33)	52.8%
119	Utilities	1,203.43	7,090.98	26,000.00	(18,909.02)	27.3%
120	Telephone	987.20	3,462.09	10,800.00	(7,337.91)	32.1%
122	Community Center	16.78	16.78	0.00	16.78	
131	Equipment Repairs	4,127.94	9,442.64	30,000.00	(20,557.36)	31.5%
132	Early Warning System	908.34	947.64	5,000.00	(4,052.36)	19.0%
133	Vehicle Insurance	0.00	17,502.73	12,000.00	5,502.73	145.9%
136	Capital Outlay	0.00	25,136.94	60,000.00	(34,863.06)	41.9%
137	Debt Service Exp. - Capit.	0.00	75,000.00	75,000.00	0.00	100.0%
139	Building & Grounds	31,703.12	33,577.85	50,000.00	(16,422.15)	67.2%
151	Gas & Oil	0.00	2,264.26	16,000.00	(13,735.74)	14.2%
181	Travel & Training	725.00	1,901.74	12,000.00	(10,098.26)	15.8%
	08-Fire Dept Totals	**$116,457.46**	**$472,497.30**	**$1,406,950.00**	**($934,452.70)**	

General Fund

Statement of Revenue and Expenditures

		Current Period Apr 2025 Apr 2025 Actual	Year-To-Date Jan 2025 Apr 2025 Actual	Annual Budget Jan 2025 Dec 2025	Annual Budget Jan 2025 Dec 2025 Variance	Jan 2025 Dec 2025 Percent of Budget
Revenue & Expenditures						
Expenses						
09-Human Resources/Grant Admin						
101	Salaries	5,153.84	20,615.36	67,000.00	(46,384.64)	30.8%
103	Unemployment Comp	0.00	29.75	160.00	(130.25)	18.6%
105	Insurance	441.79	1,363.05	6,475.00	(5,111.95)	21.1%
107A	Social Security	316.44	1,267.43	4,200.00	(2,932.57)	30.2%
107B	Medicare	74.00	296.40	1,000.00	(703.60)	29.6%
110	Pension	789.56	3,158.24	10,280.00	(7,121.76)	30.7%
117	Office Supplies	109.59	308.95	2,000.00	(1,691.05)	15.4%
09-Human Resources/Grant Admin Totals		**$6,885.22**	**$27,039.18**	**$91,115.00**	**($64,075.82)**	

General Fund

Statement of Revenue and Expenditures

		Current Period Apr 2025 Apr 2025 Actual	Year-To-Date Jan 2025 Apr 2025 Actual	Annual Budget Jan 2025 Dec 2025	Annual Budget Jan 2025 Dec 2025 Variance	Jan 2025 Dec 2025 Percent of Budget
Revenue & Expenditures						
Expenses						
10-Planning Comm & Inspection						
114	Act 474 Const Indus Educ	0.00	0.00	1,200.00	(1,200.00)	
117	Office Supplies	155.25	601.89	2,500.00	(1,898.11)	24.1%
181	Travel & Training	0.00	273.53	1,200.00	(926.47)	22.8%
191	Fund Transfer	687.50	687.50	4,125.00	(3,437.50)	16.7%
10-Planning Comm & Inspection Totals		**$842.75**	**$1,562.92**	**$9,025.00**	**($7,462.08)**	

General Fund

Statement of Revenue and Expenditures

		Current Period Apr 2025 Apr 2025 Actual	Year-To-Date Jan 2025 Apr 2025 Actual	Annual Budget Jan 2025 Dec 2025	Annual Budget Jan 2025 Dec 2025 Variance	Jan 2025 Dec 2025 Percent of Budget
Revenue & Expenditures						
Expenses						
12-Sanitation Dept						
101	Salaries	25,728.53	101,167.05	402,600.00	(301,432.95)	25.1%
103	Unemployment Comp	11.77	240.96	950.00	(709.04)	25.4%
105	Insurance	4,097.71	16,231.79	63,750.00	(47,518.21)	25.5%
107A	Social Security	1,591.96	6,253.76	24,900.00	(18,646.24)	25.1%
107B	Medicare	372.36	1,462.81	5,850.00	(4,387.19)	25.0%
110	Pension	3,941.91	15,499.30	61,600.00	(46,100.70)	25.2%
111	Fire Insurance	0.00	5,939.91	5,190.00	749.91	114.4%
113	Contract Labor	200.00	750.00	1,300.00	(550.00)	57.7%
115	Uniform Allowance	586.96	1,909.58	7,500.00	(5,590.42)	25.5%
117	Office Supplies	715.73	2,561.28	4,800.00	(2,238.72)	53.4%
119	Utilities	241.85	1,630.06	5,000.00	(3,369.94)	32.6%
120	Telephone	256.82	946.83	4,000.00	(3,053.17)	23.7%
131	Equipment Repairs	1,053.21	3,005.26	20,000.00	(16,994.74)	15.0%
133	Vehicle Insurance	517.35	11,665.60	8,200.00	3,465.60	142.3%
136	Capital Outlay	0.00	69,058.68	76,000.00	(6,941.32)	90.9%
137	Debt Service Exp. - Capit.	18,394.13	52,624.69	185,250.00	(132,625.31)	28.4%
139	Building & Grounds	1,077.42	2,216.65	10,000.00	(7,783.35)	22.2%
150	Chemicals	0.00	0.00	1,000.00	(1,000.00)	
151	Gas & Oil	1,457.32	12,249.90	100,000.00	(87,750.10)	12.2%
160	Tires & Tubes	0.00	9,914.50	20,000.00	(10,085.50)	49.6%
181	Travel & Training	74.62	1,298.48	8,000.00	(6,701.52)	16.2%
192	Disposal, Class 3 & 4	14,648.46	36,182.81	124,000.00	(87,817.19)	29.2%
193	Disposal, Solid Waste	20,141.22	68,692.98	252,000.00	(183,307.02)	27.3%
	12-Sanitation Dept Totals	**$95,109.33**	**$421,502.88**	**$1,391,890.00**	**($970,387.12)**	

General Fund

Statement of Revenue and Expenditures

		Current Period Apr 2025 Apr 2025 Actual	Year-To-Date Jan 2025 Apr 2025 Actual	Annual Budget Jan 2025 Dec 2025	Annual Budget Jan 2025 Dec 2025 Variance	Jan 2025 Dec 2025 Percent of Budget
Revenue & Expenditures						
Expenses						
14-Parks & Recreation Dept						
101	Salaries	0.00	1,288.46	0.00	1,288.46	
107A	Social Security	0.00	79.89	0.00	79.89	
107B	Medicare	0.00	18.68	0.00	18.68	
191	Fund Transfer	0.00	25,000.00	100,000.00	(75,000.00)	25.0%
14-Parks & Recreation Dept Totals		**$0.00**	**$26,387.03**	**$100,000.00**	**($73,612.97)**	

General Fund

Statement of Revenue and Expenditures

		Current Period Apr 2025 Apr 2025 Actual	Year-To-Date Jan 2025 Apr 2025 Actual	Annual Budget Jan 2025 Dec 2025	Annual Budget Jan 2025 Dec 2025 Variance	Jan 2025 Dec 2025 Percent of Budget
Revenue & Expenditures						
Expenses						
15-District Court						
101	Salaries	8,209.60	32,838.40	112,300.00	(79,461.60)	29.2%
102	Shared Salaries	2,027.08	8,108.32	24,325.00	(16,216.68)	33.3%
103	Unemployment Comp	0.00	89.23	490.00	(400.77)	18.2%
105	Insurance	1,630.74	6,247.11	19,500.00	(13,252.89)	32.0%
107A	Social Security	508.98	2,035.92	6,970.00	(4,934.08)	29.2%
107B	Medicare	119.04	476.16	1,630.00	(1,153.84)	29.2%
110	Pension	1,257.70	5,030.80	17,300.00	(12,269.20)	29.1%
117	Office Supplies	1,514.64	3,681.55	10,000.00	(6,318.45)	36.8%
120	Telephone	142.61	570.44	1,800.00	(1,229.56)	31.7%
181	Travel & Training	0.00	0.00	2,000.00	(2,000.00)	
	15-District Court Totals	**$15,410.39**	**$59,077.93**	**$196,315.00**	**($137,237.07)**	

General Fund

Statement of Revenue and Expenditures

		Current Period Apr 2025 Apr 2025 Actual	Year-To-Date Jan 2025 Apr 2025 Actual	Annual Budget Jan 2025 Dec 2025	Annual Budget Jan 2025 Dec 2025 Variance	Jan 2025 Dec 2025 Percent of Budget
Revenue & Expenditures						
Expenses						
Street Dept						
131	Equipment Repairs	0.00	1,218.34	0.00	1,218.34	
191	Fund Transfer	0.00	62,500.00	0.00	62,500.00	
	Street Dept Totals	**$0.00**	**$63,718.34**	**$0.00**	**$63,718.34**	

General Fund

Statement of Revenue and Expenditures

		Current Period Apr 2025 Apr 2025 Actual	Year-To-Date Jan 2025 Apr 2025 Actual	Annual Budget Jan 2025 Dec 2025	Annual Budget Jan 2025 Dec 2025 Variance	Jan 2025 Dec 2025 Percent of Budget
Fund Balances						
	Beginning Fund Balance	3,187,525.70	3,211,091.61	0.00	0.00	

General Fund

Statement of Revenue and Expenditures

		Current Period Apr 2025 Apr 2025 Actual	Year-To-Date Jan 2025 Apr 2025 Actual	Annual Budget Jan 2025 Dec 2025	Annual Budget Jan 2025 Dec 2025 Variance	Jan 2025 Dec 2025 Percent of Budget
Fund Balances						
	Net Change in Fund	220,286.02	196,720.11	(582,764.36)	0.00	

General Fund

Statement of Revenue and Expenditures

		Current Period Apr 2025 Apr 2025 Actual	Year-To-Date Jan 2025 Apr 2025 Actual	Annual Budget Jan 2025 Dec 2025	Annual Budget Jan 2025 Dec 2025 Variance	Jan 2025 Dec 2025 Percent of Budget
Fund Balances						
	Ending Fund Balance	3,407,811.72	3,407,811.72	0.00	0.00	

Parks & Recreation
Balance Sheets
5 Year Comparative
04-30-2025

		Book Value Apr 2025 Actual	Book Value Apr 2024 Actual	Book Value Apr 2023 Actual	Book Value Apr 2022 Actual	Book Value Apr 2021 Actual
Assets						
Current Assets						
Cash						
	Cross Bank CD	644,427.08	591,462.97			
	Cross Bank checking	508,176.17	241,841.34	116,650.25		
	First Financial Bank C/D			240,876.49		
	First National Bank of EA	6,725.30	6,711.45	6,698.27	199,813.50	271,748.15
	Parks & Recreation Operating A				172,934.21	177,346.81
	Partners Bank CD			228,586.88		
	Petty Cash	1,000.00	1,000.00	1,000.00	1,000.00	500.00
	Total Current Assets	**$1,160,328.55**	**$841,015.76**	**$593,811.89**	**$373,747.71**	**$449,594.96**
	Total Assets	**$1,160,328.55**	**$841,015.76**	**$593,811.89**	**$373,747.71**	**$449,594.96**
Liabilities						
Current Liabilities						
Other Current Liabilities						
	Ark Sales Tax	120.38				
	Total Current Liabilities	**$120.38**				
	Total Liabilities	**$120.38**				
Fund Balance						
Suplus Carryover						
	Current Net Income	239,385.95	(79,806.46)	52,371.17	16,657.59	94,066.46
	Parks & Recreation Fund Bal.	920,822.22	920,822.22	541,440.72	357,090.12	355,528.50
	Total Fund Balance	**$1,160,208.17**	**$841,015.76**	**$593,811.89**	**$373,747.71**	**$449,594.96**
	Total Liabilities and Equity	**$1,160,328.55**	**$841,015.76**	**$593,811.89**	**$373,747.71**	**$449,594.96**

City of Wynne- Park & Rec Fund

Statement of Revenue and Expenditures

		Current Period Apr 2025 Apr 2025 Actual	Year-To-Date Jan 2025 Apr 2025 Actual	Annual Budget Jan 2025 Dec 2025	Annual Budget Jan 2025 Dec 2025 Variance	Jan 2025 Dec 2025 Percent of Budget
Revenue & Expenditures						
Revenue						
	Concessions	20,848.96	23,901.06	85,000.00	61,098.94	28.1%
	Donations	0.00	0.00	13,500.00	13,500.00	
	Grant	0.00	0.00	125,000.00	125,000.00	
	Rental-Field/Park	14,622.15	72,237.90	168,000.00	95,762.10	43.0%
	Saddle Club	0.00	0.00	1,200.00	1,200.00	
074	City Sales Tax	47,314.89	248,461.95	575,000.00	326,538.05	43.2%
092	Interest on Investments	178.78	699.25	24,750.00	24,050.75	2.8%
094A	Misc Income	227.33	227.33		(227.33)	
FT	Fund Transfer	0.00	25,000.00	100,000.00	75,000.00	25.0%
	Revenue	**$83,192.11**	**$370,527.49**	**$1,092,450.00**	**$721,922.51**	
	Gross Profit	**$83,192.11**	**$370,527.49**	**$1,092,450.00**	**$0.00**	
Expenses						
101	Salaries	14,936.13	58,441.05	235,420.00	176,978.95	24.8%
103	Unemployment Comp	9.47	142.50	1,050.00	907.50	13.6%
105	Insurance	2,174.32	8,409.48	26,000.00	17,590.52	32.3%
107A	Social Security	924.90	3,619.38	14,600.00	10,980.62	24.8%
107B	Medicare	216.31	846.48	3,450.00	2,603.52	24.5%
108	Workers Comp	0.00	2,502.82	3,650.00	1,147.18	68.6%
110	Pension	1,961.60	8,107.11	29,350.00	21,242.89	27.6%
111	Fire Insurance	0.00	16,084.26	14,250.00	(1,834.26)	112.9%
113	Contract Labor	160.00	600.00	32,100.00	31,500.00	1.9%
117	Office Supplies	393.78	2,608.30	6,800.00	4,191.70	38.4%
119	Utilities	6,274.51	29,745.01	87,600.00	57,854.99	34.0%
120	Telephone	520.59	1,499.99	6,600.00	5,100.01	22.7%
131	Equipment Repairs	1,034.13	2,431.84	7,500.00	5,068.16	32.4%
133	Vehicle Insurance	250.90	2,081.33	3,500.00	1,418.67	59.5%
136	Capital Outlay	0.00	46,991.42	47,500.00	508.58	98.9%
137	Debt Service Exp. - Capit.	0.00	0.00	95,500.00	95,500.00	
138	Capital Improvement	0.00	0.00	200,000.00	200,000.00	
139	Building & Grounds	2,435.31	22,934.43	100,000.00	77,065.57	22.9%
151	Gas & Oil	0.00	1,378.45	8,000.00	6,621.55	17.2%
154	Supplies	12,864.85	19,998.98	53,000.00	33,001.02	37.7%
194	Contracted Aid	2,500.00	10,000.00	30,000.00	20,000.00	33.3%
	Expenses	**$46,656.80**	**$238,422.83**	**$1,005,870.00**	**$767,447.17**	
	Revenue Less Expenditures	**$36,535.31**	**$132,104.66**	**$86,580.00**	**$0.00**	
	Net Change in Fund Balance	**$36,535.31**	**$132,104.66**	**$86,580.00**	**$0.00**	
Fund Balances						
	Beginning Fund Balance	1,123,672.86	1,028,103.51		0.00	
	Net Change in Fund	36,535.31	132,104.66	86,580.00	0.00	
	Ending Fund Balance	1,160,208.17	1,160,208.17		0.00	

Street Fund
Balance Sheets
5 Year Comparative
04-30-2025

	Book Value Apr 2025 Actual	Book Value Apr 2024 Actual	Book Value Apr 2023 Actual	Book Value Apr 2022 Actual	Book Value Apr 2021 Actual
Assets					
Current Assets					
Cash					
Cross Bank CD					471,832.04
Partners Bank CD			306,566.53		
Street Fund Bank A/C	307,432.26	298,009.77	201,164.39	645,855.16	120,233.20
Total Current Assets	**$307,432.26**	**$298,009.77**	**$507,730.92**	**$645,855.16**	**$592,065.24**
Total Assets	**$307,432.26**	**$298,009.77**	**$507,730.92**	**$645,855.16**	**$592,065.24**
Fund Balance					
Suplus Carryover					
Current Net Income	(22,484.22)	(31,906.71)	(21,422.45)	39,225.51	(139,693.60)
Street Fund Balance	329,916.48	329,916.48	529,153.37	606,629.65	731,758.84
Total Fund Balance	**$307,432.26**	**$298,009.77**	**$507,730.92**	**$645,855.16**	**$592,065.24**
Total Liabilities and Equity	**$307,432.26**	**$298,009.77**	**$507,730.92**	**$645,855.16**	**$592,065.24**

City of Wynne-Street Fund

Statement of Revenue and Expenditures

		Current Period Apr 2025 Apr 2025 Actual	Year-To-Date Jan 2025 Apr 2025 Actual	Annual Budget Jan 2025 Dec 2025	Annual Budget Jan 2025 Dec 2025 Variance	Jan 2025 Dec 2025 Percent of Budget
Revenue & Expenditures						
Revenue						
051	State Turnbacks	58,194.42	228,401.23	731,850.00	503,448.77	31.2%
056	Street Cutting	0.00	0.00	175.00	175.00	
074	City Sales Tax	0.00	17,488.70	190,900.00	173,411.30	9.2%
092	Interest on Investments	233.03	916.61		(916.61)	
094A	Misc Income	0.00	59,772.15		(59,772.15)	
CRT	County Road Tax	20,847.86	94,961.94	145,000.00	50,038.06	65.5%
FT	Fund Transfer	0.00	62,500.00	250,000.00	187,500.00	25.0%
	Revenue	**$79,275.31**	**$464,040.63**	**$1,317,925.00**	**$853,884.37**	
	Gross Profit	**$79,275.31**	**$464,040.63**	**$1,317,925.00**	**$0.00**	
Expenses						
101	Salaries	27,546.50	103,787.78	402,600.00	298,812.22	25.8%
103	Unemployment Comp	10.91	243.13	950.00	706.87	25.6%
105	Insurance	4,076.85	15,617.55	63,750.00	48,132.45	24.5%
107A	Social Security	1,704.55	6,415.76	24,900.00	18,484.24	25.8%
107B	Medicare	398.60	1,500.24	5,850.00	4,349.76	25.6%
108	Workers Comp	0.00	17,269.47	7,750.00	(9,519.47)	222.8%
110	Pension	4,220.10	15,554.67	61,600.00	46,045.33	25.3%
111	Fire Insurance	0.00	6,079.27	5,190.00	(889.27)	117.1%
113	Contract Labor	0.00	0.00	1,300.00	1,300.00	
115	Uniform Allowance	586.96	1,909.59	7,500.00	5,590.41	25.5%
116	Publications & Dues	0.00	0.00	13,975.00	13,975.00	
117	Office Supplies	625.76	1,955.96	4,800.00	2,844.04	40.7%
119	Utilities	241.85	1,630.08	5,000.00	3,369.92	32.6%
120	Telephone	256.83	1,010.96	4,000.00	2,989.04	25.3%
131	Equipment Repairs	3,166.70	11,387.09	20,000.00	8,612.91	56.9%
133	Vehicle Insurance	0.00	13,072.35	13,900.00	827.65	94.0%
136	Capital Outlay	0.00	36,359.77	120,000.00	83,640.23	30.3%
137	Debt Service Exp. - Capit.	9,672.27	61,802.23	145,000.00	83,197.77	42.6%
139	Building & Grounds	227.96	379.44	6,500.00	6,120.56	5.8%
140	Traffic Control Maintenance	1,150.20	2,492.78	12,000.00	9,507.22	20.8%
142	Street Lights	8,719.19	34,581.59	100,000.00	65,418.41	34.6%
151	Gas & Oil	644.89	11,473.41	57,000.00	45,526.59	20.1%
154	Supplies	2,725.33	12,815.29	300,000.00	287,184.71	4.3%
160	Tires & Tubes	209.95	530.40	8,000.00	7,469.60	6.6%
181	Travel & Training	74.62	298.48	1,500.00	1,201.52	19.9%
199	City Sales Tax Projects	0.00	0.00	75,000.00	75,000.00	
	Expenses	**$66,260.02**	**$358,167.29**	**$1,468,065.00**	**$1,109,897.71**	
	Revenue Less Expenditures	**$13,015.29**	**$105,873.34**	**($150,140.00)**	**$0.00**	
	Net Change in Fund Balance	**$13,015.29**	**$105,873.34**	**($150,140.00)**	**$0.00**	
Fund Balances						
	Beginning Fund Balance	294,416.97	201,558.92		0.00	
	Net Change in Fund	13,015.29	105,873.34	(150,140.00)	0.00	
	Ending Fund Balance	307,432.26	307,432.26		0.00	